GUILD ◆ EDITION

Woodsmith®

Woodsmith.com

Vol. 40 / No. 240

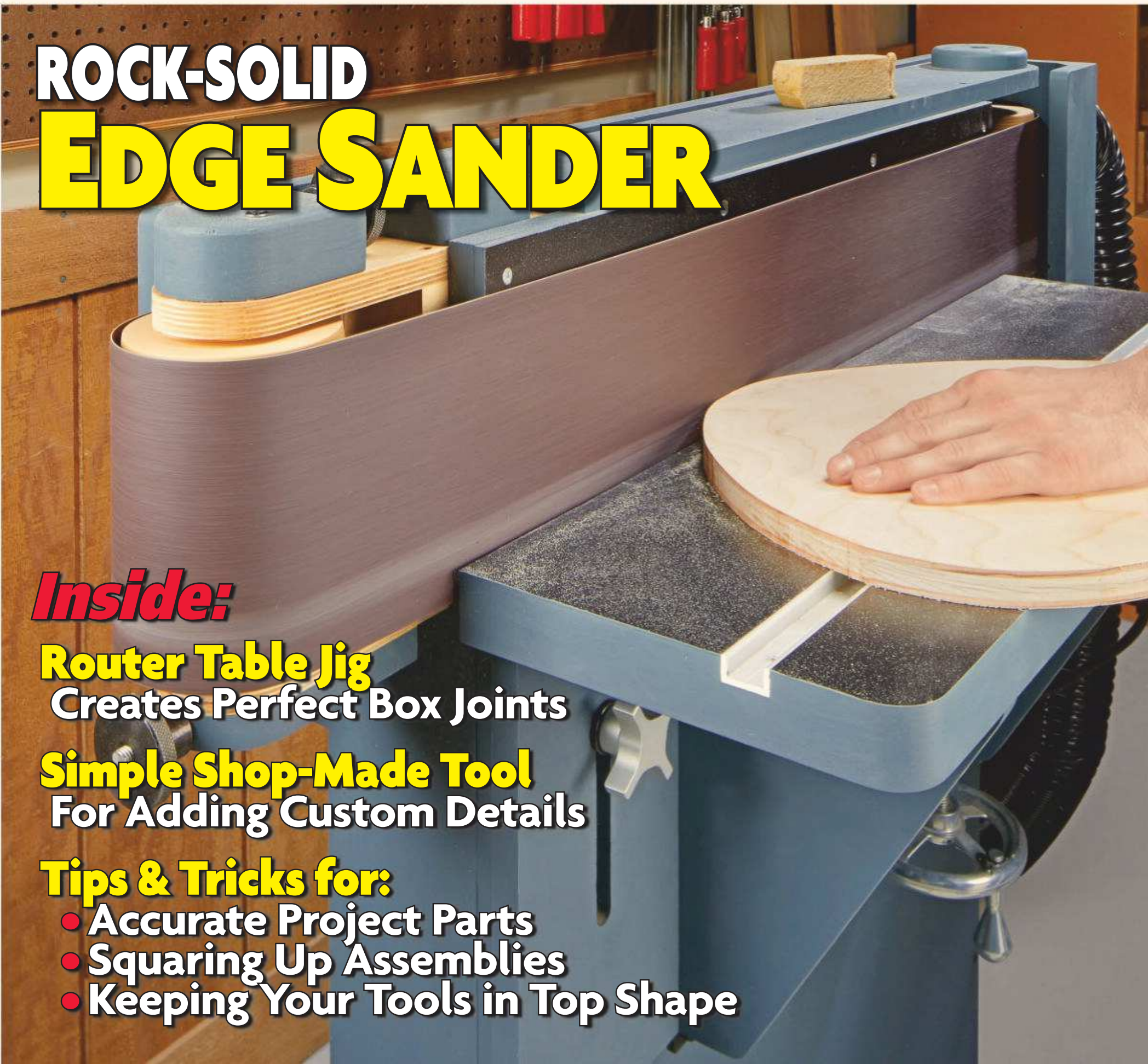

ROCK-SOLID EDGE SANDER

Inside:

Router Table Jig
Creates Perfect Box Joints

Simple Shop-Made Tool
For Adding Custom Details

Tips & Tricks for:
- Accurate Project Parts
- Squaring Up Assemblies
- Keeping Your Tools in Top Shape

Woodsmith®

EDITOR Vincent Ancona
MULTIMEDIA EDITOR Phil Huber
SENIOR EDITOR Robert Kemp
ASSISTANT EDITORS Erich Lage, Logan Wittmer
CONTRIBUTING WRITERS Bryan Nelson, Randall A. Maxey

EXECUTIVE ART DIRECTOR Todd Lambirth
SENIOR ILLUSTRATORS Dirk Ver Steeg, Harlan V. Clark, Peter J. Larson
SENIOR GRAPHIC DESIGNERS Bob Zimmerman, Becky Kralicek

CREATIVE DIRECTOR Chris Fitch
PROJECT DESIGNERS Dennis Volz, Dillon Baker
PROJECT DESIGNER/BUILDER John Doyle
CAD SPECIALIST Steve Johnson
SHOP CRAFTSMAN Marc Hopkins

SENIOR PHOTOGRAPHER Crayola England
ASSOCIATE STYLE DIRECTOR Rebecca Cunningham
SENIOR ELECTRONIC IMAGE SPECIALIST Allan Ruhnke
PRODUCTION ASSISTANT Minniette Johnson

FOUNDING EDITOR Donald B. Peschke
PUBLISHER Steven M. Nordmeyer
MANAGING DIRECTOR CLIENT SOLUTIONS Dean Horowitz
VICE PRESIDENT GENERAL MANAGER Peter H. Miller, Hon. AIA

HOME GROUP
ACTIVE INTEREST MEDIA

Woodsmith® (ISSN 0164-4114) is published bimonthly by Cruz Bay Publishing, Inc., 2143 Grand Ave, Des Moines, IA 50312.
Woodsmith® is a registered trademark of Cruz Bay Publishing.
Copyright© 2018 Cruz Bay Publishing, Inc., an Active Interest Media company. All rights reserved.
Subscriptions: Single copy: $6.95.
Canadian Subscriptions: Canada Post Agreement No. 40038201. Send change of address information to PO Box 881, Station Main, Markham, ON L3P 8M6. Canada BN 82564 2911
Periodicals Postage Paid at Des Moines, IA, and at additional offices.
Postmaster: Send change of address to *Woodsmith*, Box 37274, Boone, IA 50037-0274.

Printed in U.S.A.

WoodsmithCustomerService.com

ONLINE SUBSCRIBER SERVICES

- **VIEW** your account information
- **PAY** your bill
- **RENEW** your subscription
- **CHANGE** your mailing or e-mail address

CUSTOMER SERVICE Phone: 800-333-5075 weekdays

SUBSCRIPTIONS
Customer Service
P.O. Box 842
Des Moines, IA 50304-9961
subscriptions@augusthome.com

EDITORIAL
Woodsmith Magazine
2143 Grand Avenue
Des Moines, IA 50312
woodsmith@woodsmith.com

ACTIVE INTEREST MEDIA

PRESIDENT & CEO **Andrew W. Clurman**
SENIOR VICE PRESIDENT, TREASURER & CFO **Michael Henry**
CHIEF INNOVATION OFFICER **Jonathan Dorn**
VICE PRESIDENT, AUDIENCE DEVELOPMENT **Tom Masterson**
VICE PRESIDENT, PEOPLE & PLACES **JoAnn Thomas**
AIM BOARD CHAIR **Efrem Zimbalist III**

from the editor

Sawdust

I think a lot of us are drawn to woodworking because of the nature of wood itself. There's a certain warmth and character to it that you just don't find in other materials. And if you've been woodworking for a while, you've probably developed a sense of how wood reacts to cutting and milling, and the best ways to work with it. So the idea of adding a different material to a project may seem foreign, or even intimidating, to some woodworkers.

But in this issue, we have a couple of projects that use some non-wood materials. One is an occasional table with a marble top, and the other is a chair with a leather seat. In the case of the table, it's simply a matter of finding a local source for the marble and having it cut to size. Making the seat for the chair requires a little more hands-on effort, but we've included a breakdown of the process. Although it's a departure from working strictly with wood, I hope you'll agree that the blending of materials works well for both of these projects.

NEW FACE. I'd like to announce that Marc Hopkins has joined the *Woodsmith* staff as our new shop craftsman. We're glad to have Marc here and have already put him to work building the heirloom project for our next issue.

Vince

STATEMENT OF OWNERSHIP, MANAGEMENT, AND CIRCULATION
(Required by 39 U.S.C. 3685)

1. Publication Title: *Woodsmith*. 2. Publication No.: 0164-4114 3. Filing Date: September 18, 2018. 4. Issue Frequency: Bimonthly. 5. No. of issues published annually: 6 (six). 6. Annual subscription price: $29.00. 7. Complete mailing address of known office of publication: 2143 Grand Avenue, Des Moines, (Polk County), Iowa 50312-5306. 8. Complete mailing address of the headquarters or general business offices of the publisher: 2143 Grand Avenue, Des Moines, (Polk County), Iowa 50312-5306. 9. Full names and complete mailing addresses of publisher, editor, and managing editor: Publisher: Cruz Bay Publishing, 2143 Grand Avenue, Des Moines, Iowa 50312; Editor: Vincent Ancona, 2143 Grand Avenue, Des Moines, Iowa 50312; Managing Editor: Vincent Ancona, 2143 Grand Avenue, Des Moines, Iowa 50312. 10. Owner: Cruz Bay Publishing, 300 N. Continental Blvd, Suite 650, El Segundo, CA 90245. 11. Known bondholders, mortgagees, and other security holders owning 1 percent or more of total amount of bonds, mortgages or other securities: None. 12. (Does not apply.) 13. Publication Title: *Woodsmith*. 14. Issue Date for Circulation Data Below: August/September 2018 15. Extent and nature of circulation:

	Average no. copies each issue during preceding 12 months	Average no. copies of single issue published nearest to filing date
A. Total number of copies (net press run)	180,558	170,236
B. Paid circulation (by mail and outside the mail):		
1. Paid/requested outside-county mail subscriptions stated on PS Form 3541	133,362	126,548
2. Mailed in-county paid subscriptions stated on PS Form 3541	0	0
3. Paid distrib. outside the mails (sales through dealers/carriers, street vendors, counter sales, and other paid distrib. outside USPS)	8,601	10,281
4. Paid distribution by other classes of mail through the USPS	0	0
C. Total paid distribution	141,963	136,829
D. Free or nominal rate distribution (by mail and outside the mail)		
1. Free or nominal rate outside-county copies included on PS form 3541	1,675	1,678
2. Free or nominal rate in-county copies included on PS Form 3541	0	0
3. Free or nominal rate copies mailed at other classes through the USPS	0	0
4. Free or nominal rate distribution outside the mail (carriers or other means)	0	0
E. Total free or nominal rate distribution	1,675	1,678
F. Total distribution	143,638	138,507
G. Copies not distributed	36,921	10,250
H. Total	180,559	148,757
I. Percentage paid and/or requested circulation	98.83%	98.79%
16. Electronic Copy Circulation; Woodsmith		
A. Paid Electronic Copies	697	605
B. Total paid print copies + paid electronic copies	142,660	137,434
C. Total print distribution + paid electronic copies	144,335	139,112
D. Percentage paid (both print and electronic copies)	98.84%	98.79%

I certify that 50% of all my distribution copies (electronic and print) are paid above a nominal price.
17. Publication of Statement of Ownership. Will be printed in the Dec./Jan. 2019 (#240) issue of this publication.
18. I certify that all information furnished on this form is true and complete. (signed) Vincent Ancona, Editor

On occasion, we allow companies whose products and services may be of interest to you to send advertising mail to our subscribers. We are careful to choose ethical companies that have information of genuine interest to our subscribers. Most of our subscribers appreciate these materials. However, if you prefer to have your name deleted from the mailing list made available to other companies, please write to us at Woodsmith, 2143 Grand Avenue, Des Moines, IA 50312

contents

No. 240 December/January 2019

Projects

weekend project

Cutting Board & Cheese Slicer 16

Whether you build it for yourself or as a gift for someone else, this cheese slicer and cutting board combination is a great way to spend a few hours in the shop.

shop project

Box-Jointed Tool Tote 20

Sturdy joinery, strong but lightweight materials, and graceful curves give this practical project a look of elegant simplicity.

designer project

Campaign Chair 26

Inspired by military campaign furniture, wood and leather combine in this chair to create the most comfortable seat in the house. And you'll master some new skills while building it.

shop project

Edge Sander 34

This shop-built sander is a real workhorse. With a 6"x 89" sanding belt, a powerful 1-hp motor, and an adjustable table, it will make short work of all your sanding tasks.

heirloom project

Eastlake Table 46

From the scrolled legs to the hand-carved accents to the marble top, we've incorporated some of the quintessential Eastlake details into our version of this classic table.

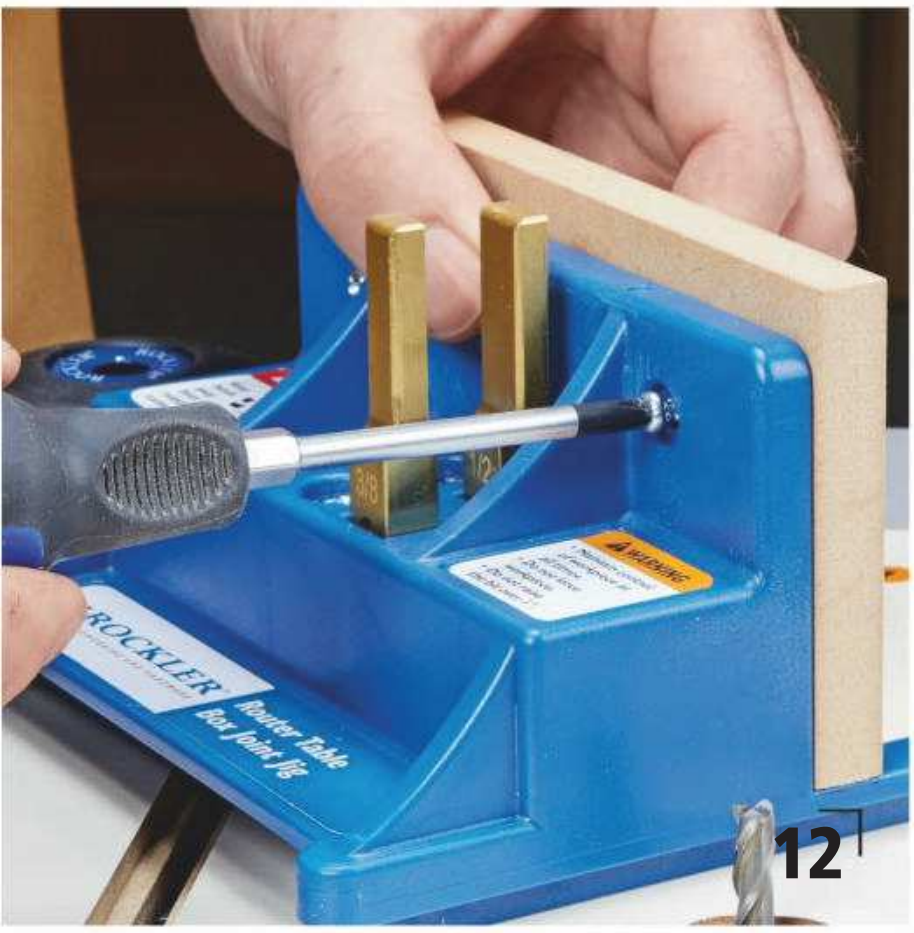

12

56

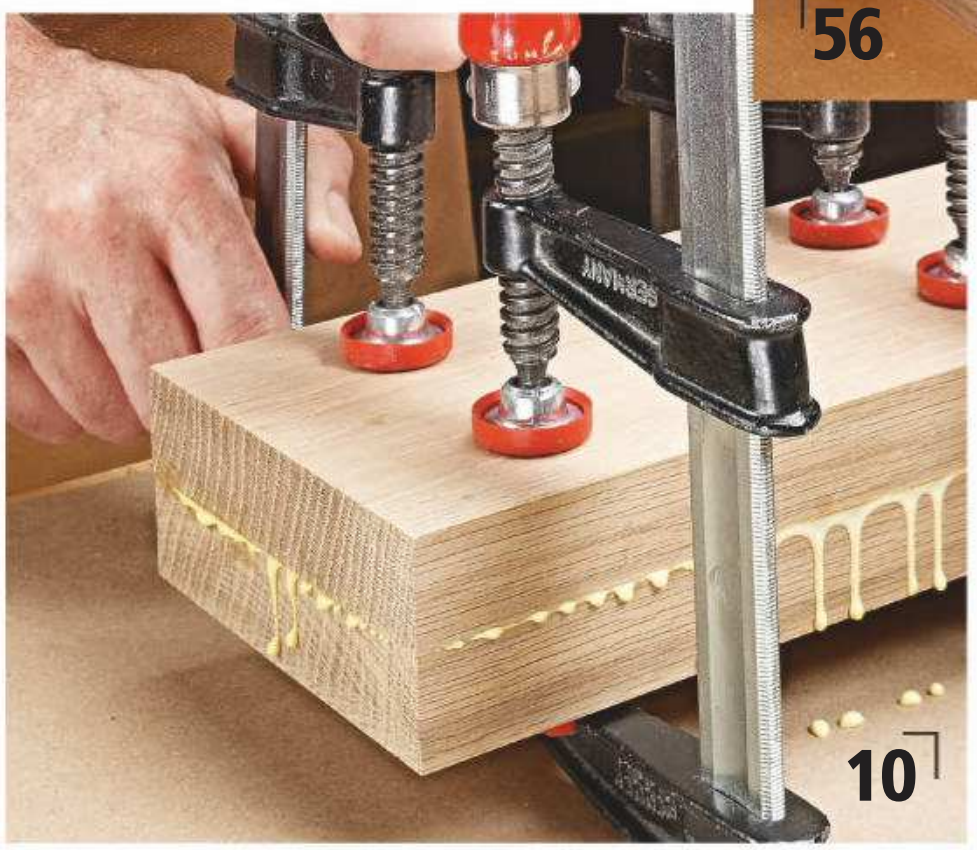

10

60

Departments

from our readers
Tips & Techniques 5

all about
PVA Glues 10

router workshop
Router Table Box Joint Jig 12

working with tools
Using a Scratch Stock 56

in the shop
Patterns & Templates. 58

woodworking essentials
3 Must-Have Squares 60

mastering the table saw
Table Saw Maintenance 62

tips from our shop
Shop Notes. 64

from our readers

Tips & Techniques

Air Filter Remote Holder

I recently installed a new air filter in my shop. The new system includes a remote to control the fan. However, I knew that something small like that could easily get lost in my workshop while I worked, so I came up with the remote holder you see here.

THREE-PIECE CONSTRUCTION. The holder consists of three parts — a plywood spacer that's sandwiched between two layers of hardboard. The plywood spacer has a cutout to cradle the remote, and the front hardboard acts as a lip to keep it in place. The crown in the back piece of hardboard provides a place to attach it to the wall.

I also added a finger notch to make it easier to remove the remote from the holder. This was routed with a core box bit after the holder was built and assembled. Now, the remote is easily in reach and I can turn on the filter as I turn on the lights in my shop.

Dennis Volz
Parker, Colorado

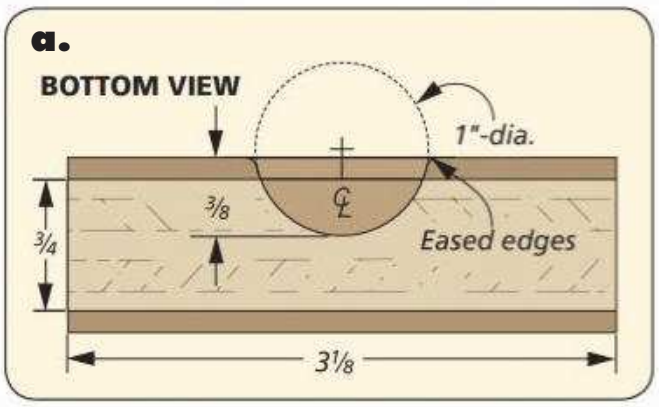

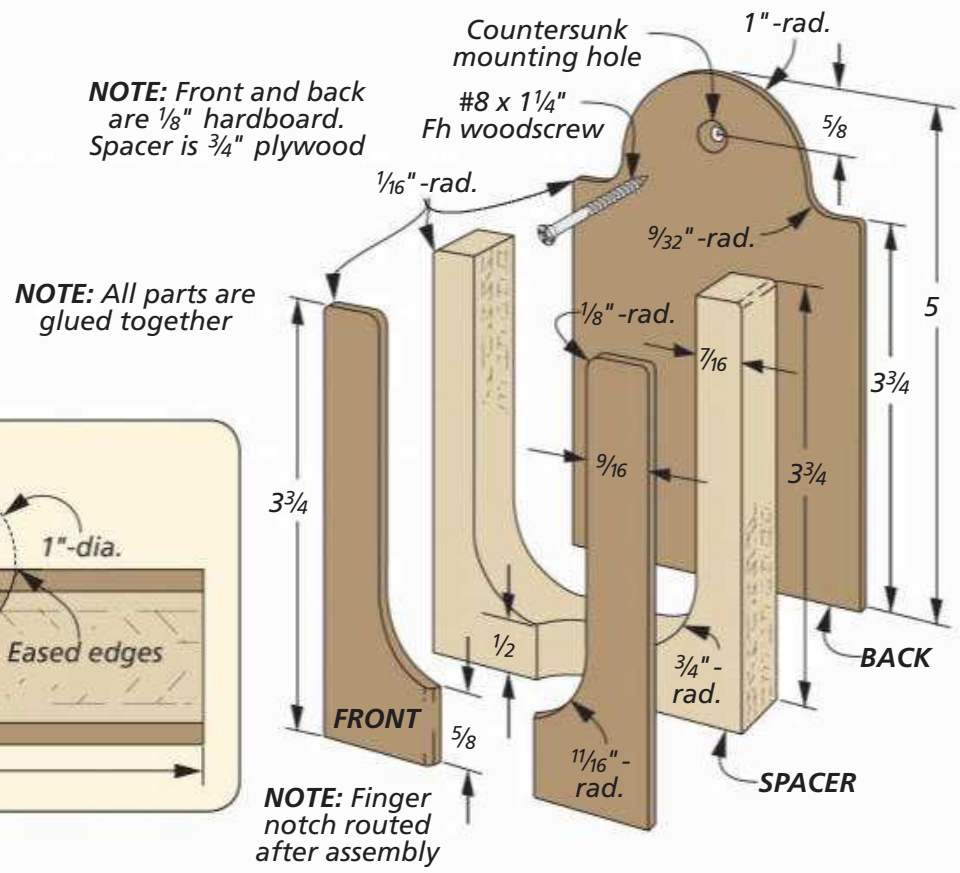

Win This Forrest Blade

Simply send us your favorite shop tips. If your tip or technique is selected as the featured reader's tip, you'll win a *Forrest Woodworker II* blade. To submit your tip or technique, go to *SubmitWoodsmithTips.com*. There you can upload your tips and photos for consideration.

The Winner!

Congratulations to Vernon Sandusky, the winner of this *Forrest Woodworker II*. To find out how you can win this blade, check out the information at left.

Illustrations: Becky Kralicek

QUICK TIPS

Sanding Strips. *Henry Wittmer* of *Runnels, IA*, likes to cut strips of sandpaper for sanding turned workpieces and curves. To help strengthen the sandpaper and keep it from breaking or ripping, he backs the sandpaper with heavy-duty tape before cutting it into strips.

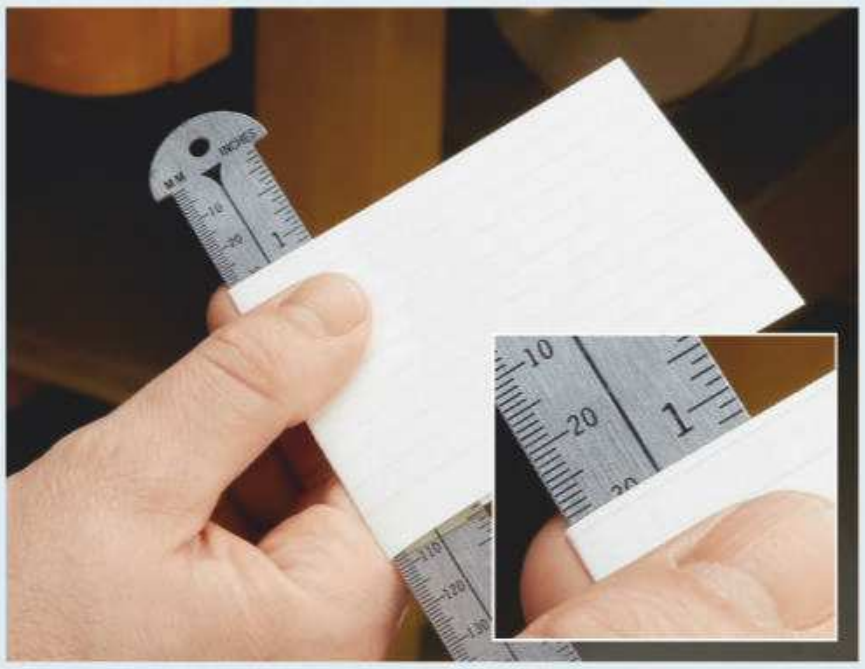

Standard to Metric. *Tom Moss* of *Bradenton, FL*, found that trying to eyeball a conversion between metric and standard on his steel rule was tricky. To convert between the two, Tom folds an index card and slips it over the rule. Now, he has an accurate way to read both measurements.

Dust Shield. *Leslie Nason* of *Waterford, WI*, was recently installing hardware overhead and the dust from the drilling was falling into his face. To fix this, Leslie drilled through a plastic bottle cap and left it on the drill bit. The cap catches the sawdust and keeps the debris off his face.

Golf Tee Painter Points. *Roger Lynne* of *Bloomington, MN,* uses a simple trick for holding a workpiece while finish is drying. He inserts golf tees through a piece of pegboard. By resting the heads of the tees on the workbench, they act as painter's points and hold workpieces off the surface.

Woodsmith SHOP

Iowa Public Television Iptv.org — *Sponsoring Station*

POWERMATIC, Kreg, Old Masters — *Major Program Underwriters*

Titebond® — *Additional Funding*

▲ The sawhorses can be pulled off the holder and unfolded for use around the shop.

◄ Magnets embedded in each sawhorse and the back add holding power to keep them in place.

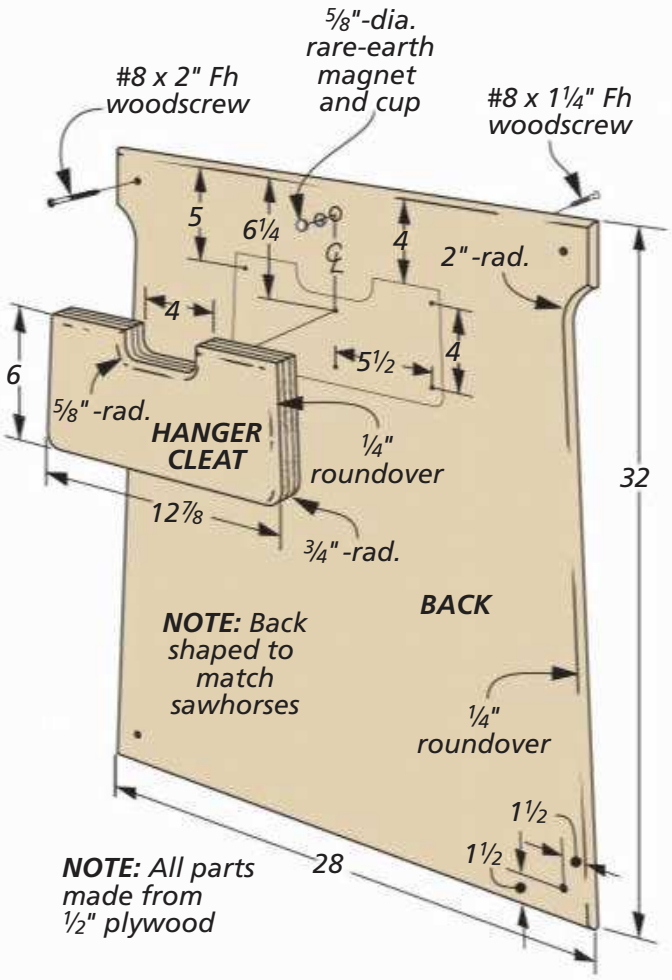

Sawhorse Storage

Recently, I built a set of the fold-flat sawhorses from *WoodsmithPlans.com*. They work great and are compact for easy storage. But in light of a recent resolution to clean up my shop, I decided to build storage for the sawhorses.

WALL HUNG. The holder starts with a piece of plywood that I shaped to match the profile of the sawhorses. I attached a hanger cleat made out of three layers of plywood that supports the sawhorses. The assembly is then attached through the back onto the wall.

A rare-earth magnet is installed in the back. I also installed magnets on each sawhorse. The first sawhorse has one on each side, and the second sawhorse has a magnet on the inside. They add a little extra holding power to make sure the horses don't slip off the cleat. Now, my shop is one step closer to being organized.

Dan Gijon
Ontario, Canada

Drill Press Drum Sander

A thickness sander is a tool that I've always wanted, but never purchased. When recently working on a project, I improvised one by using my drill press with a sanding drum. I set the distance between the fence and the drum to make a light pass, adjusting the fence closer on every pass. By feeding the parts through against the rotation of the drill press, you get a perfectly sanded surface.

Levi Huber
Urbandale, Iowa

DIGITAL WOODSMITH

SUBMIT TIPS ONLINE

If you have an original shop tip, we would like to hear from you and consider publishing your tip in one or more of our publications. Jump online and go to:

SubmitWoodsmithTips.com

You'll be able to tell us all about your tip and upload your photos and drawings. You can also mail your tips to "Woodsmith Tips" at the editorial address shown on page 2. We will pay up to $200 if we publish your tip.

RECEIVE FREE ETIPS BY EMAIL

Now you can have the best time-saving secrets, solutions, and techniques sent directly to your email inbox. Just go to:

Woodsmith.com
and click on,
"Woodsmith eTips"

You'll receive one of our favorite tips by email each and every week.

How-To: SET THE ANGLE

Adjust Angle. Set the position of the platen by turning the two adjustment bolts on the backside of the sled.

Lock it Down. After verifying the angle of the platen with a digital angle guide, lock it in place by tightening the jam bolts.

Fine-Tune Miter Sled

Whenever I build a project that requires precise angles, the setup and fine-tuning of the blade angle can be a pain, so I built this table saw sled. It allows me to leave my blade set at 90° and still cut 18-24° miters on the end of workpieces. The range of miter angles can be extended with different angled support blocks.

ADJUSTABLE PLATEN. The heart of the miter jig is an adjustable platen that's attached to a base with a continuous hinge. The base has a pair of support blocks and a hardwood runner. To lock the platen in place, the support blocks each have two bolts. One bolt is used to adjust the angle of the platen and another going the opposite direction locks the platen in place. To register the workpiece and hold it securely, I added a cleat to one edge and a hold-down to clamp the workpiece in position.

SETTING THE ANGLE. To cut a miter, leave the saw blade set at 90°. Then loosen the jam bolts, and adjust the angle of the platen using the adjustment bolts on the backside. Once the angle is set and verified with a digital angle gauge, tighten the lock bolts back down. You can see these steps in the photos at right. If any adjustments are needed to the angle of the cut, you can tweak it with the adjustment bolts in back.

Vernon Sandusky
Vacaville, California

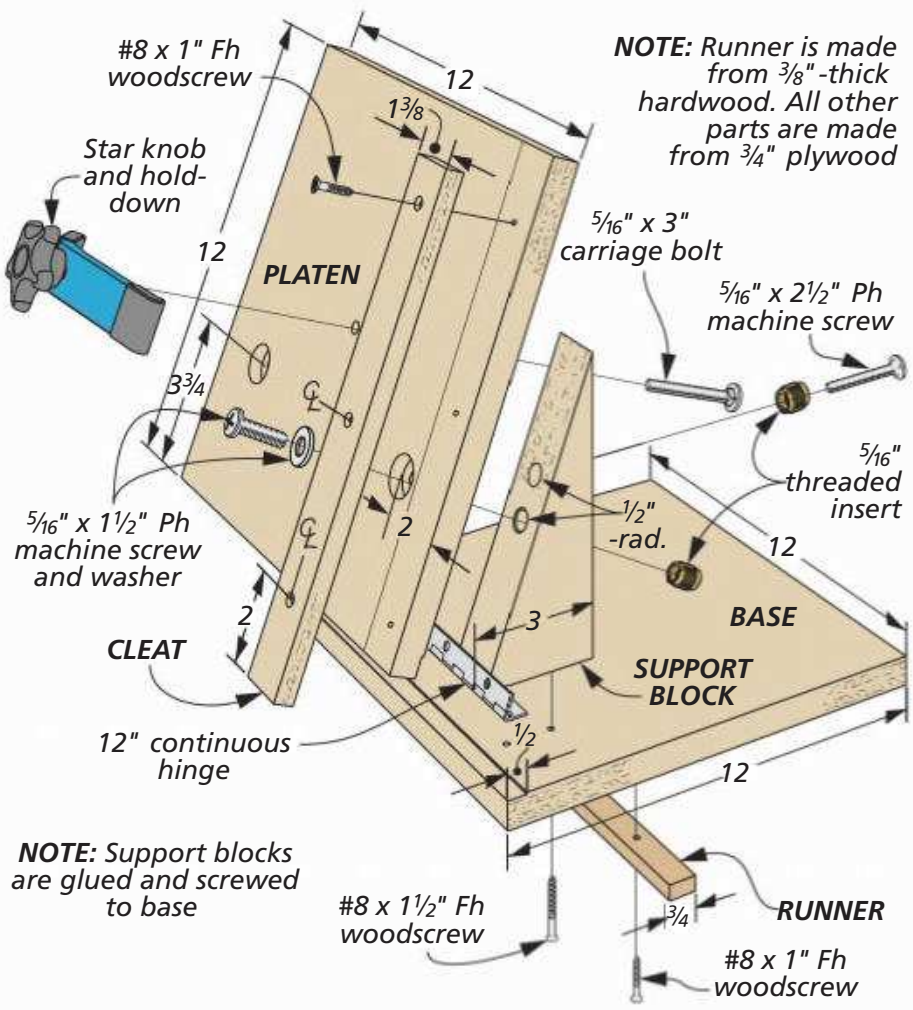

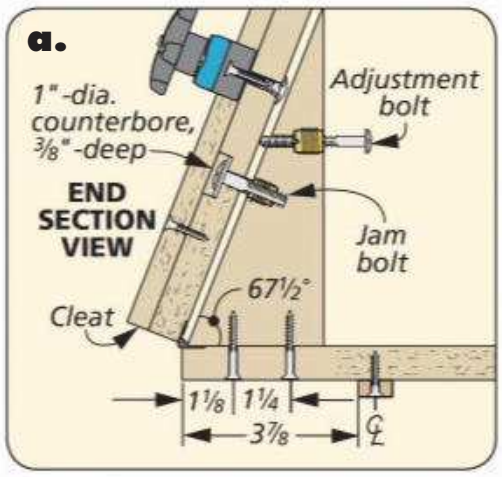

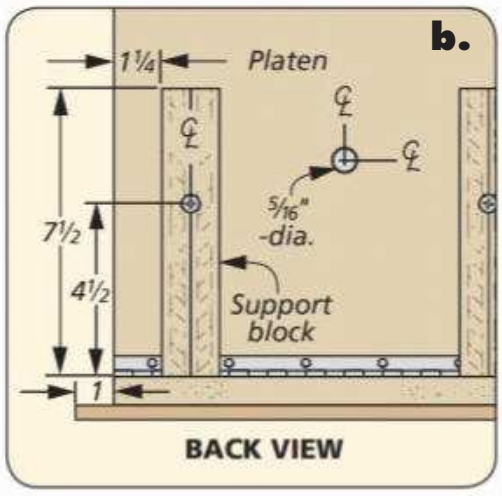

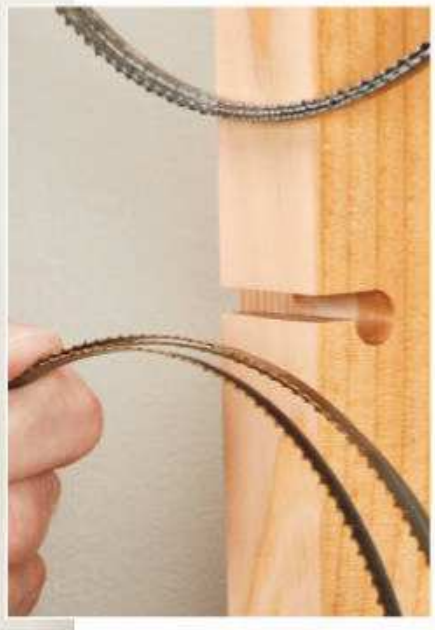

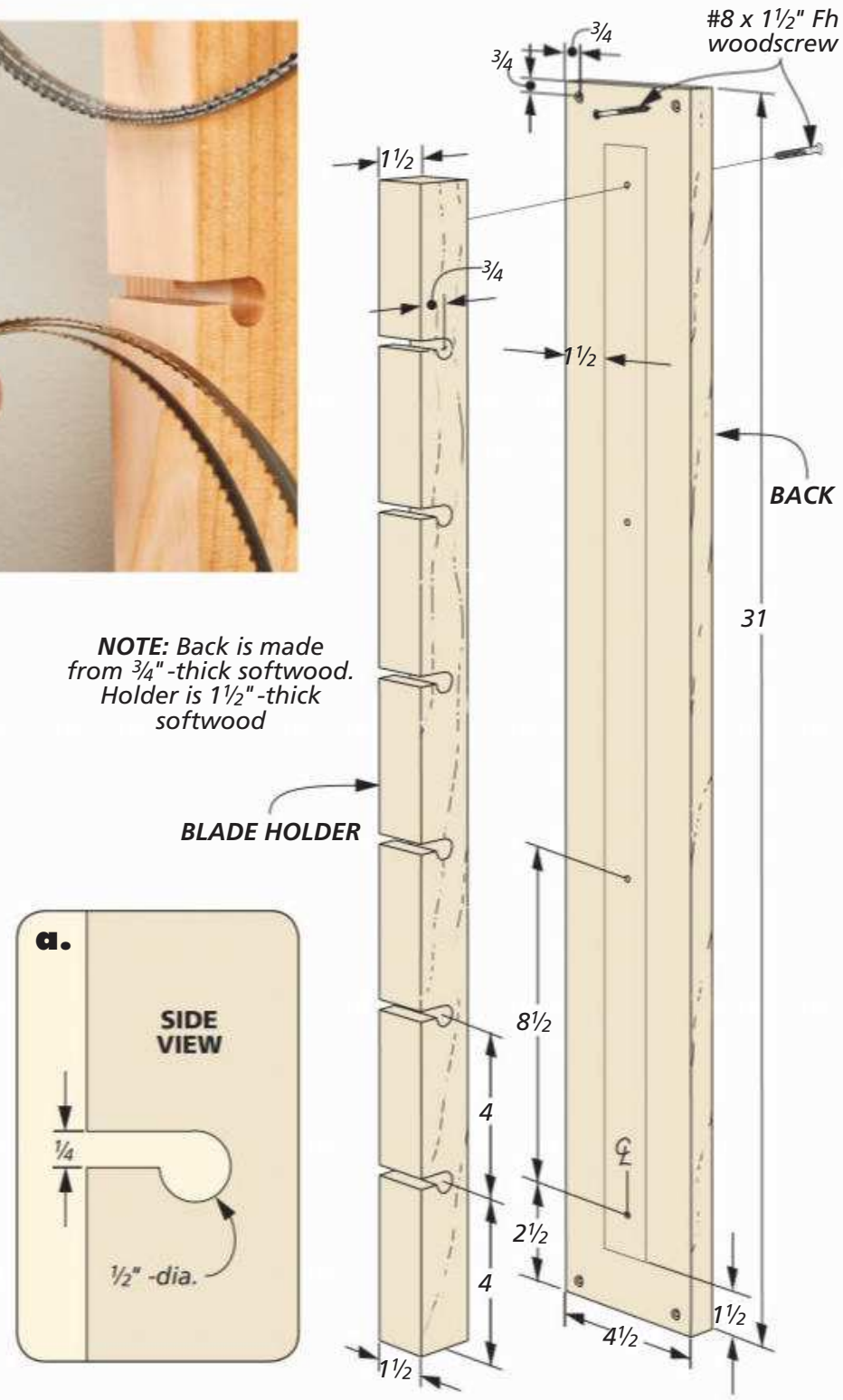

Band Saw Blade Storage

Storage of my band saw blades has always been difficult. The uncoiled blades take up too much space while hanging on the wall. So, I built the rack shown here to hold all my coiled blades.

The rack is made out of two pieces. The holder portion has holes drilled in it, and slots cut to the holes. It's attached to a backer that mounts to the wall. Now, I can quickly and easily hang up my coiled band saw blades.

Bob Stanley
Van Wert, Ohio

QUICK TIPS

Sticky Plugs. *Max Doyle* of *Hazelton, IA,* didn't like how plugs would roll off his band saw table as he cut them free. To solve this problem, Max uses a piece of painter's tape over the plug faces. Then, after he is done cutting the plugs, he peels the tape back and pulls the plugs off as he needs them.

Saving Fence Adjustment. *William Aulick* of *Cincinnati, OH*, was changing bits in his router table and needed to keep the same fence setting. To solve this, he registers the fence location with two clamps. With the bit changed, he can slide the fence back to the clamps and the same position.

all about

PVA Wood Glue

We all use wood glue in our projects and we take it for granted that it's going to hold joints together. Gaining a better understanding of how glue works can actually improve your results, however.

CHEMISTRY AT WORK. PVA (polyvinyl acetate) wood glue is the most common type of adhesive for the woodworking shop. It's the white or yellow wood glue you can find almost anywhere tools and supplies are sold.

But what is "PVA" and what does it mean for the woodworker? To answer this question, I contacted Bob Behnke, chemist and technical services manager at *Franklin International,* makers of *Titebond* wood glues.

Bob explained that PVA wood glues are basically a mixture of microscopic polyvinyl acetate polymer particles and polyvinyl alcohol that is suspended in water. Glue manufacturers use other additives and fine-tune the amount of water to adjust water resistance, open time, and other properties.

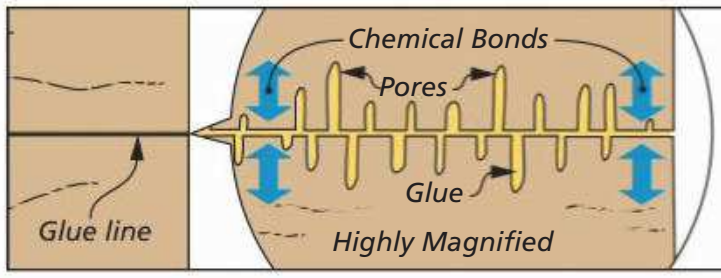

How PVA Wood Glue Works

The polyvinyl alchohol surrounding the resin particles chemically bonds to the cellulose in the wood. The PVA resin contributes to a strong glue bond.

As an interesting side note, original PVA wood glues were yellow due to the type of resins used. Today's PVA glues are naturally white. The glue is then colored to give it the yellow color customers expect. Given the same chemistry and additives, there's no difference in the strength or open time.

HOW DOES IT BOND? PVA glues work through a chemical bond between the polyvinyl alcohol and the cellulose in the wood, as in the illustration above. This chemical reaction, in addition to the strength of the PVA polymer, is what creates a tight bond in properly fitting joints.

A FEW REQUIREMENTS. For PVA glues to do their job, there are a few basic requirements. The first is that the joint must be gap-free and tight-fitting. PVA glues are not designed to fill gaps. (For this, you would need to use epoxy.)

Written by: Randall Maxey

Another requirement that causes some confusion is that the surfaces to be joined must be as smooth as possible. The common practice of "roughing up the surface" of the wood with sandpaper to create a mechanical bond simply doesn't hold true. Sanding weakens the joint because it damages the wood fibers. An ideal surface is one that has been planed glass-smooth.

It goes without saying that the surfaces must also be clean and free of oils, finish, dirt, and dust. These interfere with the cellulose bond. Wiping with a solvent like acetone until the rag doesn't show residue is good practice before applying glue.

GLUE APPLICATION. Before breaking out the glue and using it on a project, make sure it's fresh (photo below). And give the bottle a good shake before opening it.

When it comes time to apply the glue, the ambient temperature and temperature of the wood can have an effect. Colder temperatures (less than 50°F) lengthen the open time and the time it takes for the glue to fully cure. (You should never allow wood glue to freeze.) Conversely, as the temperature heats up, the open time gets shorter.

▲ Write the purchase date on the bottle for reference. PVA wood glues have a shelf life of about two years.

▲ Surfaces to be glued should be clean and smooth. A thin layer of glue spread evenly across both surfaces yields a strong bond.

▲ Wait until the glue skins over and is partially dry before scraping off the excess. Avoid using damp rags.

To apply the glue, a thin, even film gives the best results (left photo above). Use a brush or your fingers to do this. For broad surfaces, Bob recommends a U-notch trowel with 3⁄32" notches. You can find these trowels where tile is sold.

CLAMPING PRESSURE. Once the glue is applied, you only have a few minutes to bring the joint together and apply the clamps. But here is where it gets interesting. You don't need as much clamping pressure as you think. The most important element is a clean, tight-fitting joint.

Bob explains that if the joint fits properly, you only need enough clamping pressure (about 5 psi) to keep the wood from moving while the glue cures (about one hour). There's no need to use all of your strength when tightening the clamps. Just make sure the clamping pressure is evenly distributed.

Clamping moldings, miters, or end-grain joints while the glue dries often poses a challenge. For these cases, see the box below for a solution.

CLEAN-UP. After the clamps are on, don't touch anything for at least 10-20 minutes. Then you can go back and scrape off the partially dried glue (right photo above). Any residual glue can be sanded off after it completely dries.

Bob advises against wiping the glue with a damp rag. It forces glue into the wood that can show up in the finish. A damp rag also introduces excess moisture that can affect the joint strength.

Gluing up a project is something we often don't give much thought to. Understanding how PVA glue works can help you obtain stronger joinery. W

Quick Fix: TITEBOND QUICK & THICK

You hear it all the time. End-grain glue bonds are weaker than other joinery methods. And that's generally true. But *Titebond Quick & Thick* can add some muscle to a traditionally weaker joint.

This product is a variation of PVA wood glues like other *Titebond* products for woodworking. It's been specially formulated to be much thicker with a shorter open time (2-3 minutes) than traditional PVA wood glues. It was originally developed for applying hard-to-clamp molding and trim. But it also excels at gluing end grain. It doesn't soak into the end grain, which can starve the joint. You're left with a stronger glue bond.

► For gluing end grain, miters, or applying molding and trim, *Quick & Thick* is a real problem-solver.

Illustrations: Bob Zimmerman

Rockler's router table Box Joint Jig

Box joints are an excellent choice when it comes to decorative joinery that also provides a tremendous amount of glue surface. Plus, there's a number of ways to create the machine-cut box joint slots — ranging from the table saw to the router table.

For the majority of the box joints I make in my shop, I routinely use a shop-made jig to support the workpiece while cutting the box joint slots on the router table. However, a typical shop-made jig only allows you to make one size of box joint. So a new jig needs to be made each time you change to a different size box joint.

Because I turn to box joints quite often for my projects, I thought it was about time I gave a commercially available jig a try, instead of my beat-up version that was in dire need of replacement. For the tool tote featured on page 20, *Rockler's Router Table Box Joint Jig* was put to the test.

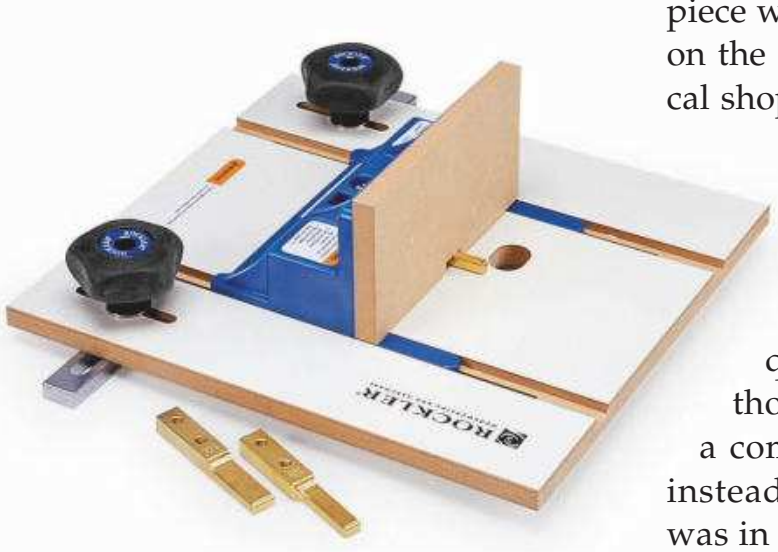

▲ The *Rockler* box joint jig fastens to the router table miter slot. Interchangeable keys allow for different size box joints.

This jig consists of a melamine base that locks into the miter gauge slot of your router table (photo at left). A plastic fence is attached to two aluminum runners that slide in grooves in the base. The use of two runners over just one exponentially increases the accuracy of the box joints. And interchangeable keys make it easy to change the size of slots you're able to cut.

Over the next few pages, I'll walk you through the process of creating the box joints for the tool tote using this jig. Along the way, I'll point out some of the features that make this jig excel over a shop-made version.

QUALITY COMPONENTS

If you've ever used a shop-made box joint jig, then you know that the jig is only as accurate as the material you

Written by: Robert Kemp

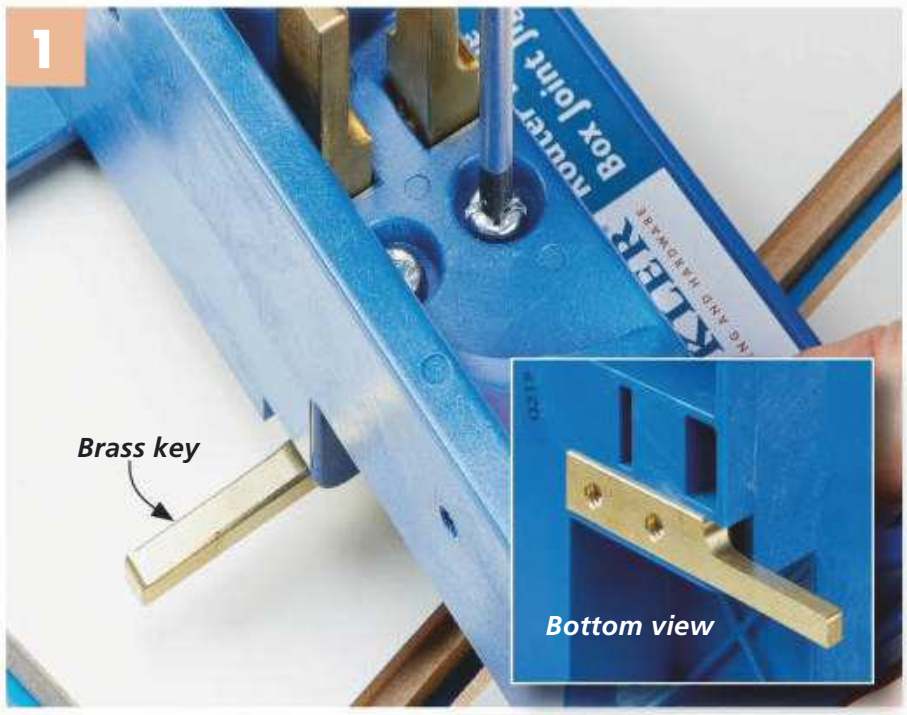

The *Rockler* jig comes with three sizes of brass keys. Held in a groove in the bottom of the fence assembly (inset), each key allows you to make different sizes of box joints.

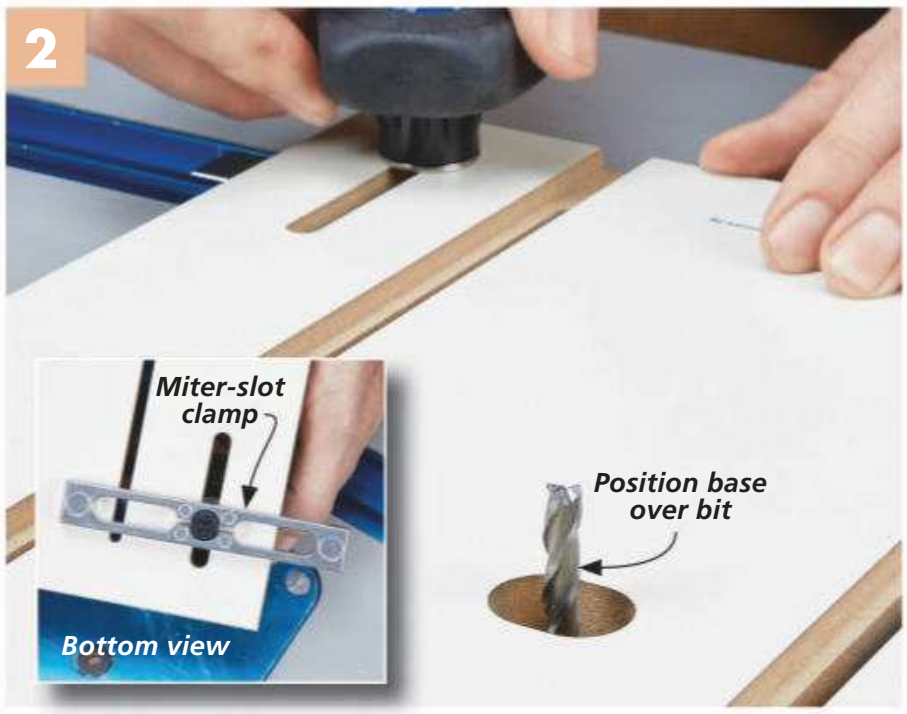

The base of the jig is placed on the router table and locked in place using the two miter slot clamps (inset). Be sure the router bit is positioned in the base opening.

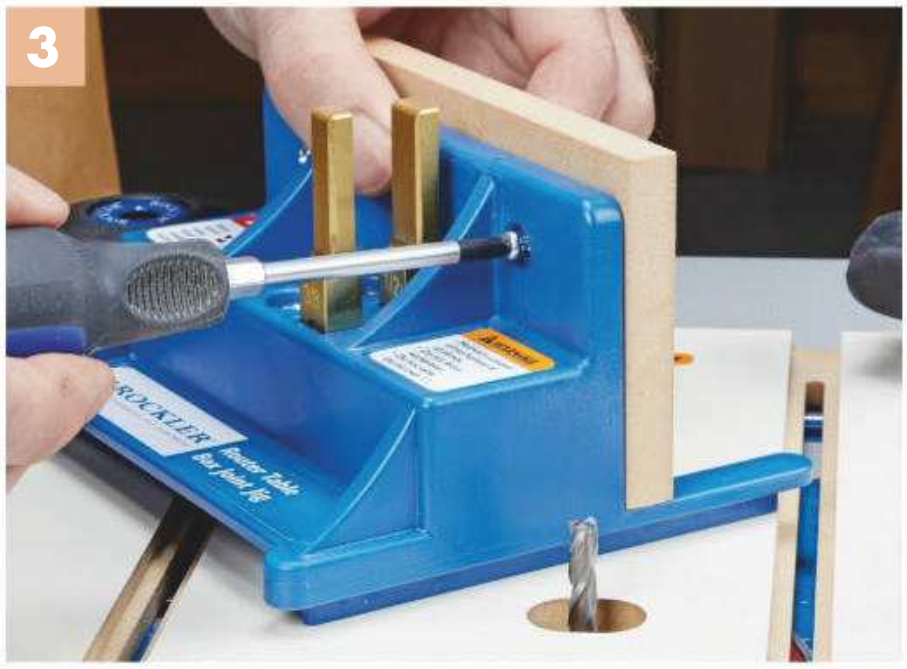

A sacrificial MDF fence is attached to the front of the jig to help control tearout. One fence is supplied with the jig, but it's simple to make more after the first becomes chewed up.

Using a workpiece that is planed to the proper thickness for your project, raise or lower the bit so that it's positioned just above the surface (inset). This results in pins that stand just proud of the box.

choose for the key. Ideally, you want a material that is precisely machined and won't wear quickly. Wear will lead to slight variations in the slots, which in turn means the joint won't be as tight as it should be. On the *Rockler* jig, the keys are made from solid brass.

The size of the key also determines the size of the box joint you're able to cut. Here, several brass keys are provided for making ¼", ⅜", or ½" box joints. Changing out the key is simply a matter of removing the two screws on top of the fence and replacing it with another key. For the box joints on the tool tote, I used the ¼" key as shown in Photo 1, above. If larger box joints are what you need, check out the box at the bottom of page 15 to see a box joint jig designed with larger projects in mind.

MACHINED BASE. As I mentioned before, the entire setup is mounted on a melamine base, as shown in Photo 2. This whole unit, in turn, is positioned on the router table (with the router bit in the opening) and locked securely in place. The two expanding miter slot runners are tightened via two knobs on top of the base.

SACRIFICIAL FENCE. The sled also provides a place for mounting a sacrificial board along the front edge to control tearout. It's attached to the fence with a couple of screws (Photo 3). You want just enough clearance underneath so the fence slides smoothly over the base. A piece of paper makes a good shim if necessary.

SIMPLE BIT POSITIONING. With the jig assembled, next you need to set the router bit height. The tool tote has ¼"-wide slots, so I used a ¼" spiral upcut bit. Position your thicknessed workpiece next to the bit (⅜" thick for the tool tote) and raise or lower the bit until it's just above the surface, as shown in Photo 4 and the inset photo. This ensures the box joint pins are just proud of the surface when the box is assembled later on.

A precise setup is critical for tight-fitting box joints. Here, I used a setup block to properly set the distance between the router bit and the brass key. This determines the spacing between the slots.

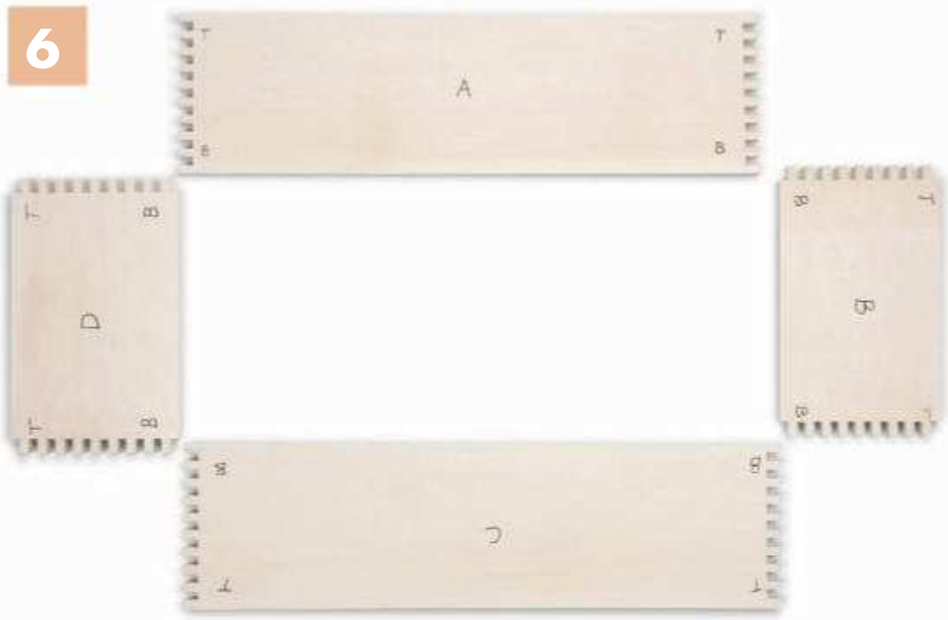

Be sure to label all of the box parts in a manner that allows you to keep them organized when cutting the joints. Here, I also marked the top (T) and bottom (B) edges of each workpiece.

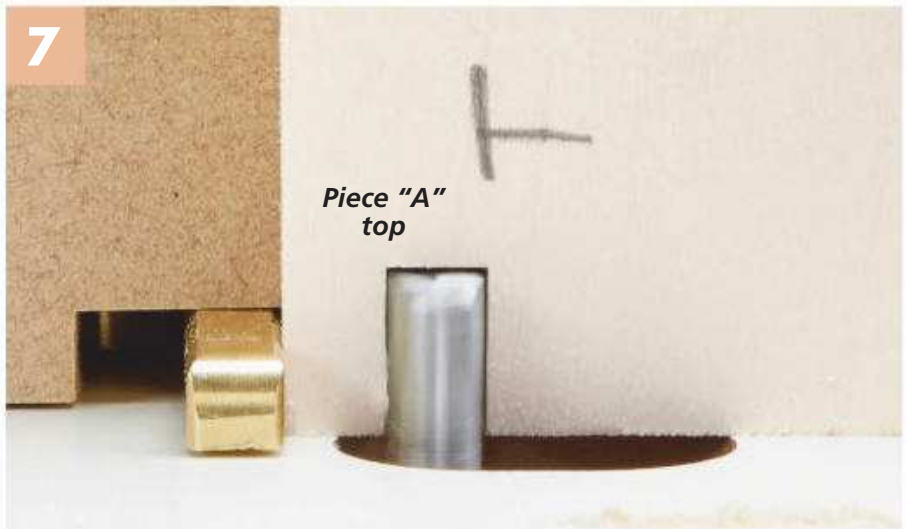

To cut the first slot in a workpiece, position the piece so that it's butted against the brass key. Hold the piece to the fence with firm pressure and pass it over the bit.

After creating the first slot, it's simply a matter of hopping the workpiece over the key and proceeding along the end. If you don't end with a full pin or slot, don't worry. This gets trimmed later on.

QUICK SETUP

With the router bit set to the proper height, just a couple more things need adjusting before starting to cut the box joint slots for the tool tote using the *Rockler* jig. The first thing is to set the distance between the bit and the key. This distance (along with the diameter of the router bit) determines the width of the pins in the workpiece.

To do this task, simply loosen the two knobs at the rear of the jig and slide the base side-to-side until the spacing is as shown in Photo 5. Since it's such a critical measurement for the success of the joint, I used a brass setup block to set the position. Now, tighten the knobs to secure the base to the router table.

TIPS FOR SUCCESS. Having the jig set up properly is just the first ingredient for success in making accurate box joints. There are a few other points to keep in mind before you get to work.

STAY ORGANIZED. Unintentionally cutting parts in the wrong sequence can make a project go downhill quickly. The best way to avoid this is to label all of the project parts. I also marked the top and bottom of each workpiece to ensure positioning the workpieces in the correct orientation (Photo 6).

BE CONSISTENT. It's also important to stay consistent with each pass of the workpiece over the bit. Even slight changes in the pressure applied can affect the fit of the box joint. Hold the jig with both hands and perform each pass exactly the same.

FULL PINS & SLOTS. Because the eye is naturally drawn to the alternating grain of a box joint, visual accuracy is more important than dimensional accuracy. This simply means that there should be a full pin or full slot at the top and bottom of the workpiece. The easiest way to end up with full pins and slots is to start with extra-wide workpieces and trim them to size after the box joints are cut.

MAKING BOX JOINTS

Starting with the long side pieces, Photo 7 shows how the first piece is positioned against the key and fence to make the first pass. After the first slot is made, simply "hop" it over the key (Photo 8) and continue down the workpiece. Be sure to start at the top edge on every workpiece and work toward the bottom edge.

To cut the slots on the other end, flip the workpieces end-for-end, making sure you start with the same top edge

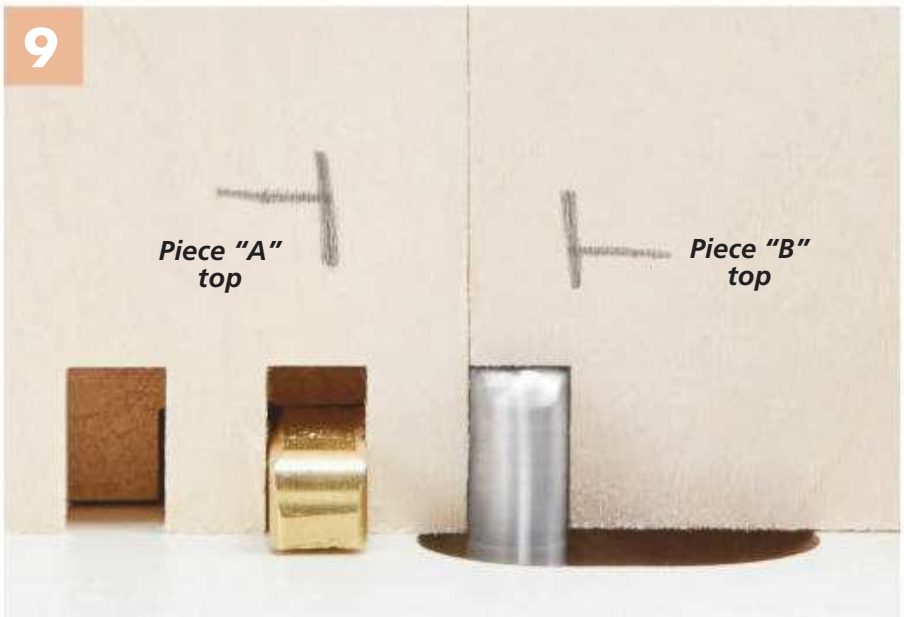

The process for cutting the slots in the ends begins by positioning a side piece over the key, as shown, and butting the end piece against the side. This ensures you'll start the end piece with a slot.

After making the initial slot, you'll then proceed along the workpiece as before. And like the side pieces, the remaining material at the edge gets trimmed up.

against the key as you did on the other end of the workpiece.

ENDS UP NEXT. The technique for cutting the short end pieces starts out slightly different. Since the sides began with a full pin on each edge, the ends will have a slot. To make this cut, you'll use the side piece as an index.

Photo 9 above shows what this setup looks like. Position a side piece over the key (the last slot) and butt an end piece up against it. Hold the pieces tight to the fence and make the cut. The rest of the cuts on the end pieces are made the same as on the sides. Simply hop the workpiece over the key (Photo 10) and continue moving down the end of the workpiece.

When you flip the end piece to complete the cuts on the other end, be sure to index the workpiece against the same side piece you used previously to keep the cuts consistent. And like I said earlier, don't worry about not ending with a full pin, this excess material gets trimmed when you're all done.

IMPRESSIVE RESULTS. I have to admit, the results I achieved using *Rockler's Router Table Box Joint Jig* were far superior than using my traditional shop-made jig. Not only were the joints crisper and more accurate, but the entire setup process was much quicker with this well-thought-out jig. And when I'm ready to make box joints in a different size, this jig is up to the task.

If box joints are a commonly used joinery option in your shop, you might want to give this jig some serious consideration. Additionally, if large box joints (and large panels) are typical in the projects that you make, check out the box below to see how *Rockler* has you covered in that area, as well. W

Even with light-colored wood, the contrast between end grain and face grain is very distinctive on the tool tote.

Upsized Box Joints: ROCKLER'S XL BOX JOINT JIG

While the *Rockler* box joint jig works great for the smaller sized parts of the tool tote, what do you do when it comes to the big projects, like a blanket chest or large cabinet? Well, it turns out *Rockler* has that avenue covered as well with their *XL Box Joint Jig*.

As the name implies, this jig not only cuts larger box joints (½" and ¾"), it also has a larger base and fence system for supporting much larger workpieces. Instead of attaching the keys to the fence like on the regular jig, the anodized aluminum keys on this jig attach to the base with a couple of screws. But switching between sizes is just as simple as before. And the addition of a front locking fence helps secure those large panels.

The *Rockler XL Box Joint Jig* provides the capacity for holding larger panels safely and securely.

Weekend Project

Mini Cutting Board & Cheese Slicer

The small amount of material and time required to build this cutting board and cheese slicer set makes it the perfect gift for the holidays.

Here in the Midwest, like much of the country, family gatherings and dinners with friends are a common occurrence. And my house is no exception. I love to host friends and family, and I especially enjoy preparing good food for them. My favorite part of these evenings is the time when guests are arriving, the food is cooking, and I have a chance to step away from the kitchen to enjoy a glass of wine and a few light hors d'oeuvres with my guests.

If you're anything like me, however, the light snacks before dinner are always an afterthought. This usually involves rounding up a clean cutting board and knife to slice cheese for everyone. That's where having a designated cutting board and cheese slicer like the one shown here got me excited. Combined, these are the perfect set to complement your dinner nights and cut down on the hustle and bustle of getting dinner ready.

QUICK & EASY. As you can see in the photo above, the cheese slicer uses a commercially available wire to make cuts. While it takes a little bit of work to make the wire holding mechanism, the slicer requires very little time and material. This makes it an ideal gift. Much like the slicer, the cutting board takes little material and is the perfect use for small cutoffs from previous projects. And speaking of the cutting board, that's where I began my build.

Written by: Logan Wittmer; Project Design: Dennis Volz

Making the CUTTING BOARD

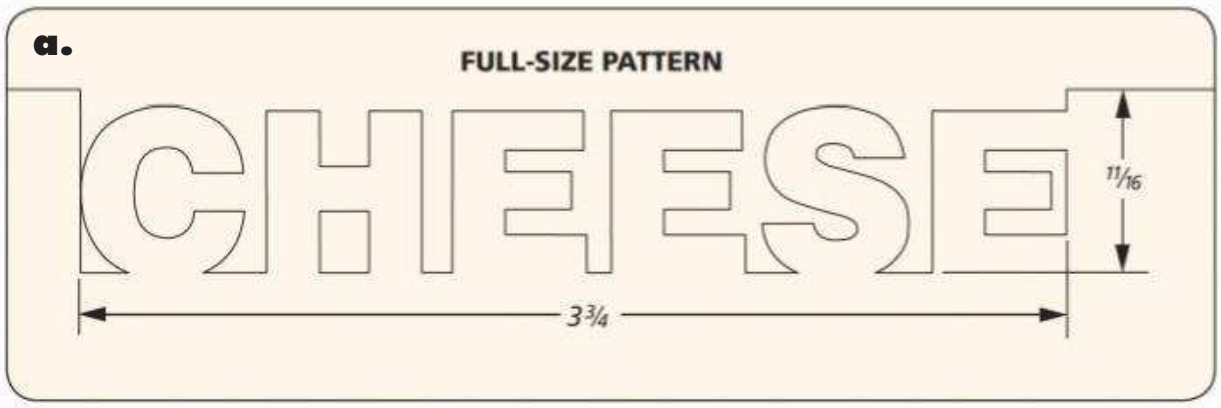

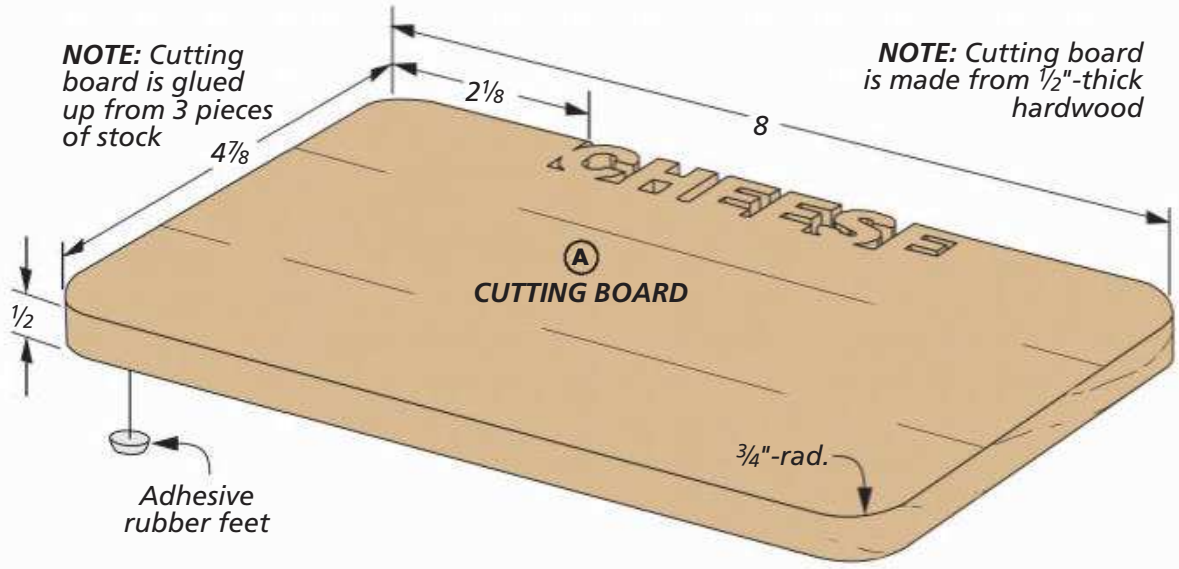

The small footprint of the cutting board makes it the perfect size for slicing your favorite vintage of aged cheddar. The addition of small rubber feet makes it a great, non-slip serving platform, as well.

A TRIO OF BOARDS. While you could cut the board out of a single piece of stock, I decided to glue the board up from three separate pieces of hard maple. Because the board will be used for serving food, it will end up getting washed and wet. Gluing up three pieces of stock for the board gives it the best chance to stay flat and not cup or twist.

I started with long stock and planed it down to thickness. After cutting it to length, I glued up the board using a waterproof wood glue.

FOLLOW THE TEMPLATE. To dress up the board, I decided to add a decorative element and cut the word "CHEESE" into it. This starts by printing out the pattern shown above. Then, you can center it on the board and mount it with spray adhesive. Before you start sawing out any of the letters at the scroll saw, there are a few starter holes that need to be drilled. You can see how this is done at the drill press in Figure 1, below. Just make sure to use a backer board to keep chipout on the back to a minimum.

CAREFUL BLADE SELECTION. With the needed starter holes drilled in the board, you can head over to the scroll saw. Before you start creating sawdust, you'll want to give a little thought to what blade you have in your saw. Because I made my board out of hard maple, I wanted a blade that was sturdy, but also gave me the smoothest cut possible. The blade I chose was a #5 crown-tooth blade, and it worked well.

After loading the blade, it's a simple matter of following the pattern and removing the waste, as seen in Figure 2. And, while I was at the scroll saw, I rounded the corners of the board, as well.

A little fettling with needle files will clean up the letters as needed and a quick sanding breaks the edges. Now, the board is ready for a set of rubber feet and a finish. I used mineral oil since it's a food-safe finish and can be reapplied over time. Then, you can turn your attention to the cheese slicer.

How-To: CUT THE "CHEESE"

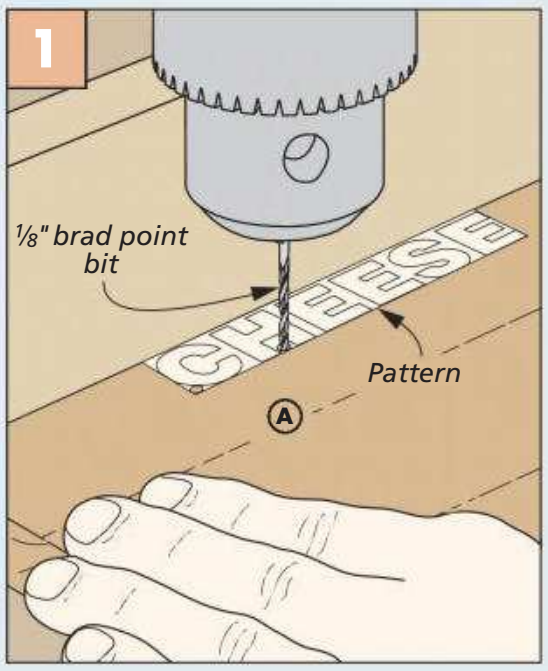

Starter Holes. Use a small brad point bit and a backerboard to drill starter holes for the saw blade.

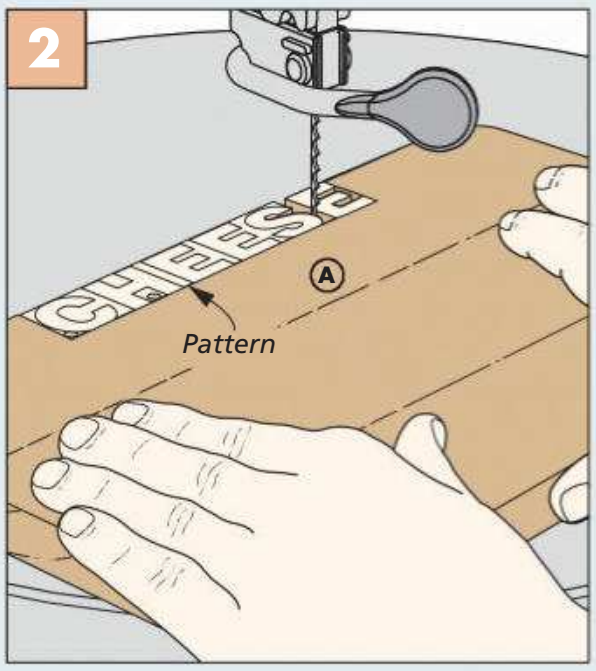

Scroll Work. At the scroll saw, cut around each letter with a fine-toothed blade to remove the waste.

Materials & Supplies

A	Cutting Board (1)	½ x 4⅞ - 8
B	Slicer Frames (2)	3/16 x 1¾ - 8 11/16
C	Slicer Scales (2)	3/16 x 1¾ - 4⅛

- (4) Adhesive Rubber Feet
- (1) 3/16"-dia. x 3¾" Brass Rod
- (1) 10-24 Brass Knurled Thumb Nut
- (1) 5" Cutting Wire

Illustrations: Becky Kralicek

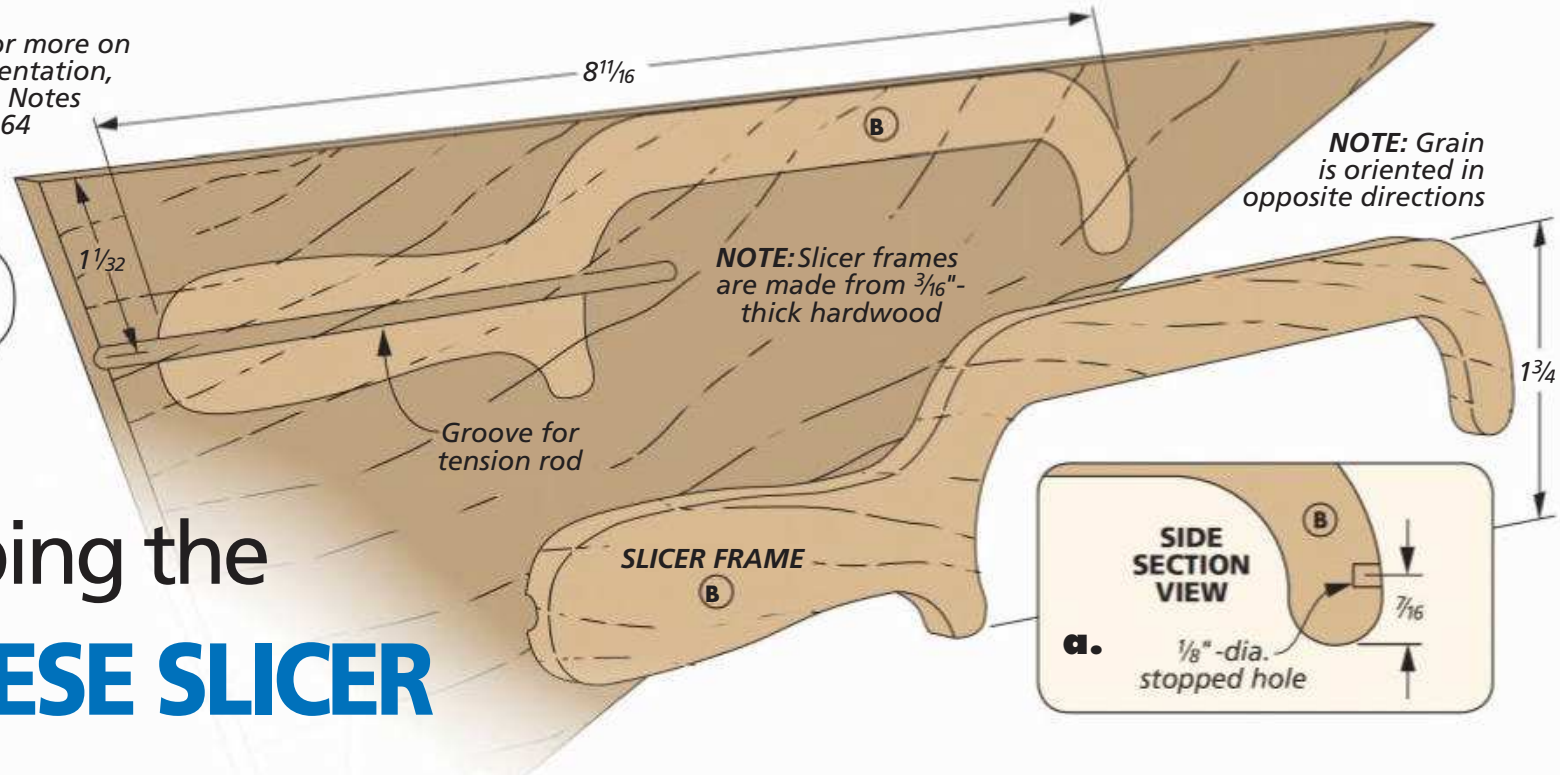

Shaping the CHEESE SLICER

Now that you have the cutting board complete, the slicer is up next. It presents a few more challenges than the board did. First, it has a curved frame that allows the wire to be tensioned. On the sides of the frame is a pair of scales for a comfortable handle. Finally, there is a wire assembly. This consists of the cutting wire and a threaded brass rod that you'll fashion to hold the wire. Don't worry though. The metalworking is pretty simple. But first, you'll want to start by making the frame of the slicer.

FRAME. The frame is built in two halves. Not only does this make routing the groove for the brass rod easier, but it also allows you to alternate the grain direction so that the frame remains strong. With the stock cut and planed to size, use the pattern to the left to lay out the slicer so that the grain on each half is traveling in alternate directions. Then head over to the router table to rout a groove in the handle portion of each half (Figure 1, below).

Now it's time to glue up the two halves. I waxed the brass rod blank with paraffin wax and used that to

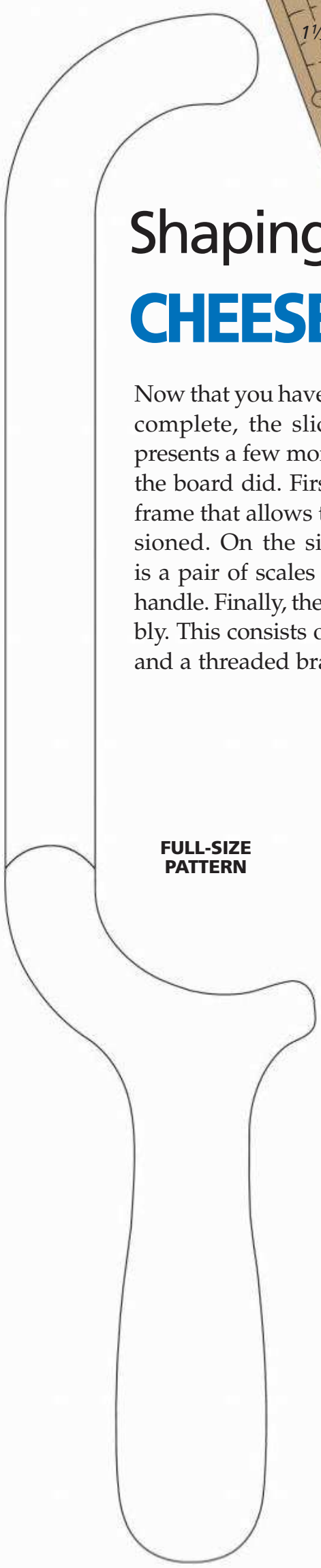

How-To: MAKE THE FRAME

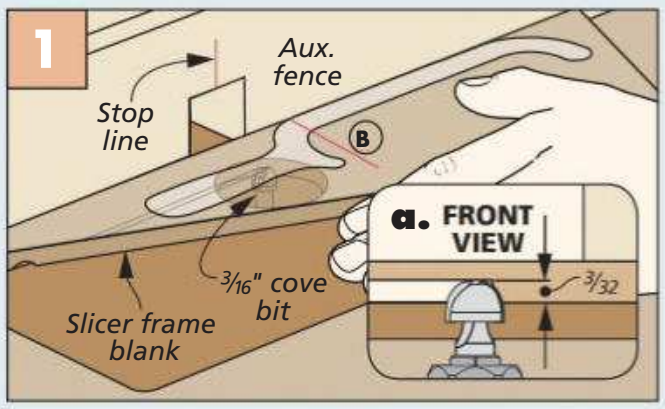

Rout Rod Groove. Using a cove bit in the router table, rout a shallow stopped groove in the handle of each frame blank.

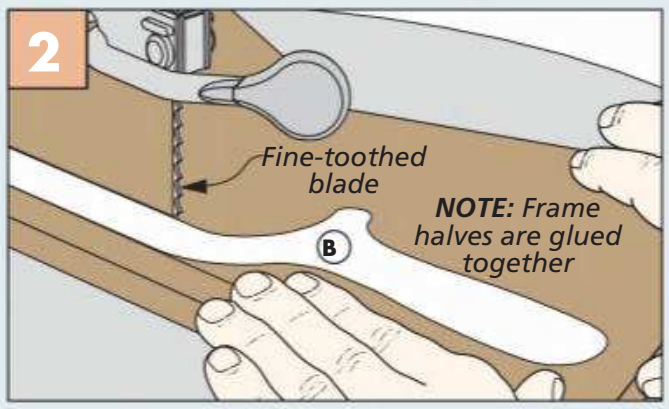

Cut the Frames. At the scroll saw, cut out the slicer frame. Stay to the waste side of the line and use a fine-toothed blade.

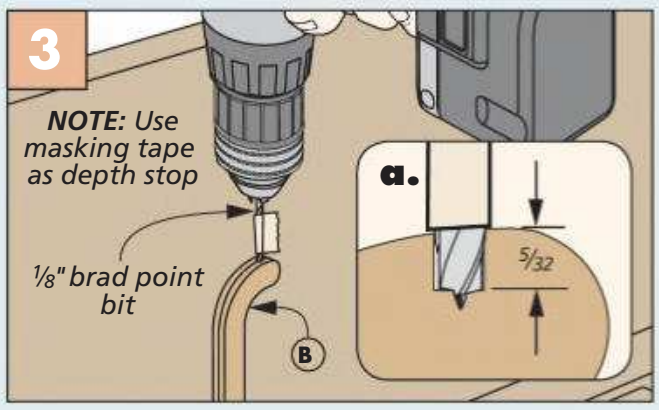

Stopped Hole. With a brad point bit, carefully drill a stopped hole in the end of the slicer frame for the wire end.

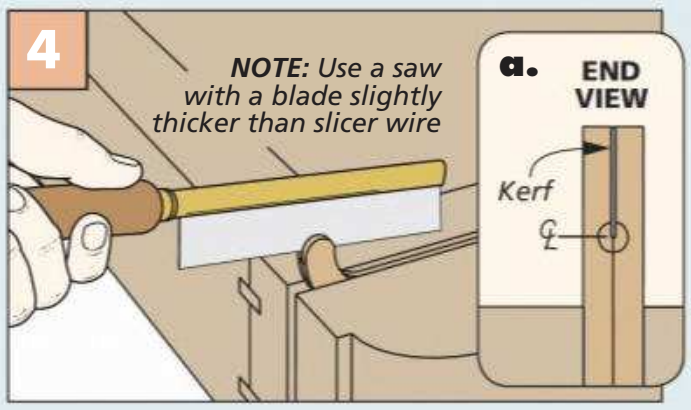

Cut a Slot. Grab a hand saw with a thin plate and cut a kerf in the slicer frame, cutting half way into the stopped hole.

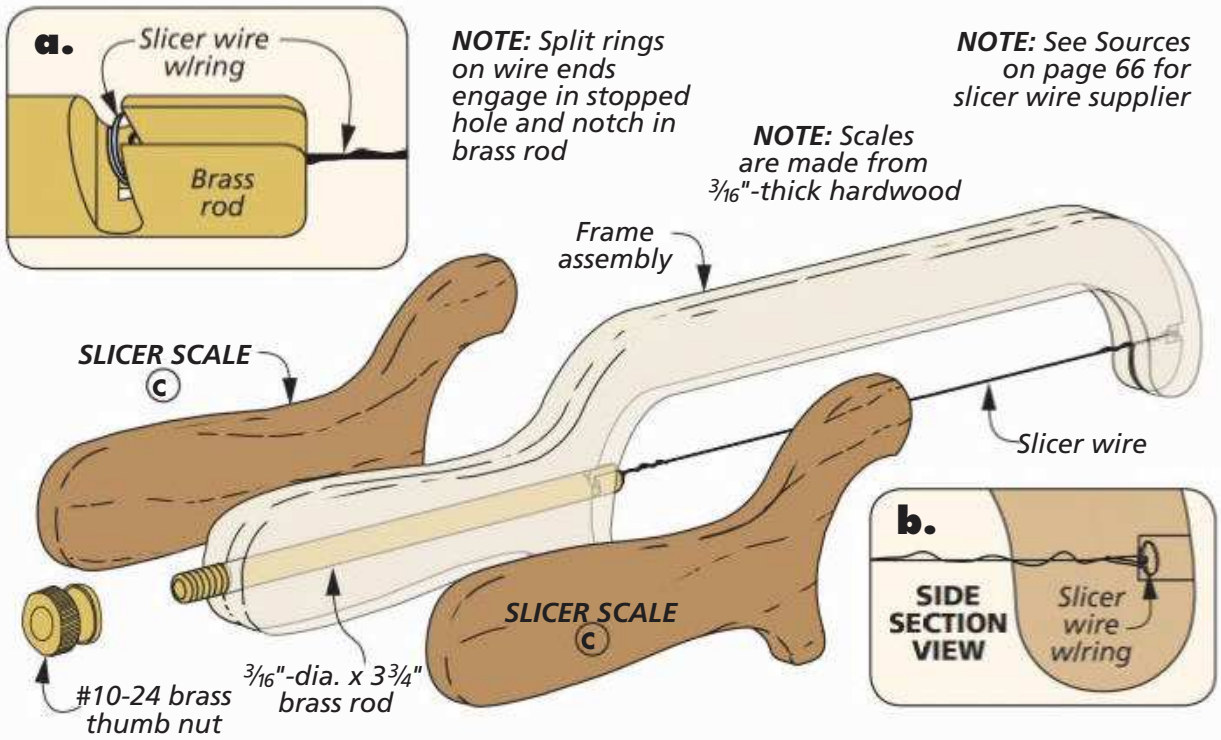

align the halves while the glue dried. The wax allows the rod to slide out without sticking. It's then a simple matter of cutting the frame to shape at the scroll saw, as seen in Figure 2 on the previous page.

There's just a little bit of work left on the frame. First, drill a stopped hole in the end of the frame and then cut a thin kerf into that hole, as seen in Figures 3 and 4 on the previous page. Detail 'a' shows what you're going for.

SCALES & ROD

Finally, a pair of scales wraps up the slicer. These can be cut to size at the scroll saw and glued onto the frame. You'll want to make sure to ease the edges with some rasps before gluing the scales on (Figure 1, below). After the scales are glued onto the frame, you can refine the entire slicer shape with sandpaper and ease all the edges, as seen in Figure 2 below. Like the board, the slicer is finished with mineral oil.

TENSION ROD. The wire for the cheese slicer is fed through the kerf into the hole on the end of the slicer and tensioned with a brass rod and nut through the handle. A notch in the rod secures the slicer wire. The steps for creating the tension rod are pretty straightforward. The How-To box to the right will guide you through it. It starts by threading one end of the rod. On the opposite end, a hole is drilled and a notch is cut into that hole using a rotary tool. Finally, a slot is cut into the notch and through the end of the rod (Figure 4).

After the mineral oil is absorbed, you can install the wire with the tension rod. Then, sit back, relax and have a little cheese with your glass of wine. W

How-To: SHAPE THE SCALES

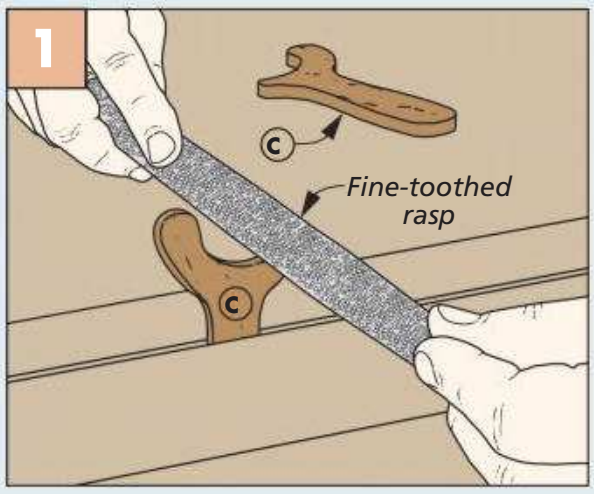

Round Over. Use a rasp to gently round over the edges of the scales, but do not change the overall profile.

Refine the Shape. After gluing the scales to the frame, sand the entire handle so the scales match the frame.

How-To: CUT ROD

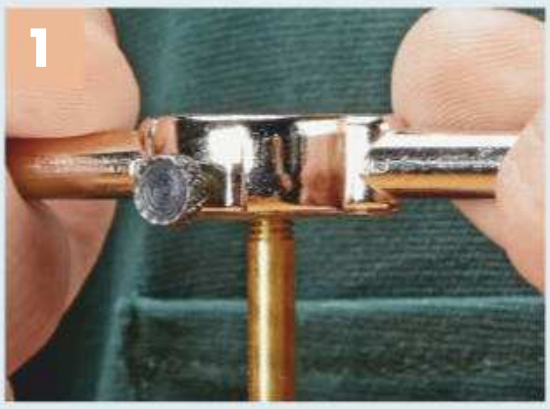

Threads. Using a 10-24 die held in a die holder, cut the threads on the end of the brass rod.

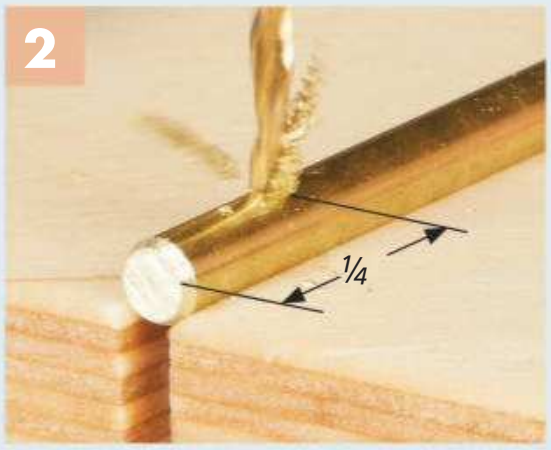

Hole for Notch. Drill a hole in the end of the brass rod to create a stop point for the notch.

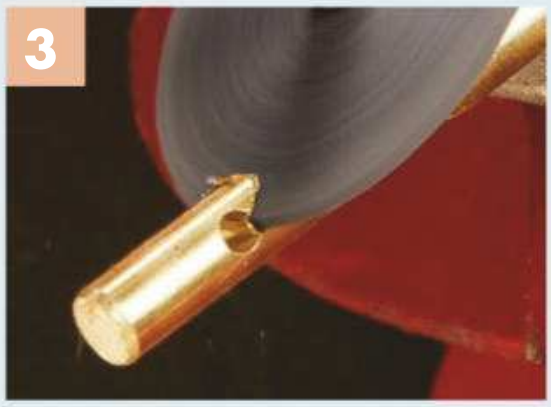

Cut the Notch. Load a fiber cutoff disc in a rotary tool and cut an angled notch, stopping in the drilled hole.

Slot for Wire. With the same fiber cutoff disc, cut a slot through the end of the rod for the slicer wire.

Stackable Tool Tote

Whether you primarily work in the shop or on-the-go, this sturdy and stylish tool tote has plenty of room to hold all of your must-have tools.

Transporting tools is often a necessary evil. Woodworking projects frequently keep us moving around the shop during the build process, and sometimes around the home when it comes time to install our finished pieces. So why not have a tool tote that's as nice as the projects we turn out?

Based around the concept of a traditional carpenter's toolbox, this version adds a few practical and distinctive details that can't be found in commercial models. It's sure to showcase your woodworking talents, as well as the pride you take in your tools.

CURVES & COMFORT. This tool tote was designed with comfort in mind. And that starts with the carrying handle. The gentle curve makes gripping the handle agreeable, even when you've got it loaded down with tools. In addition, the case and tray are made out of basswood to keep the weight down. The cherry posts and handle provide plenty of structural rigidity.

To top it all off, the easy-to-cut box joints not only look good, but they also mean this tool tote will come together in no time at all. And that's a win-win project in my book.

Written by: Robert Kemp; Project Design: Chris Fitch

Construction Overview / *OVERALL DIMENSIONS: 19"W x 15¼"H x 8"D*

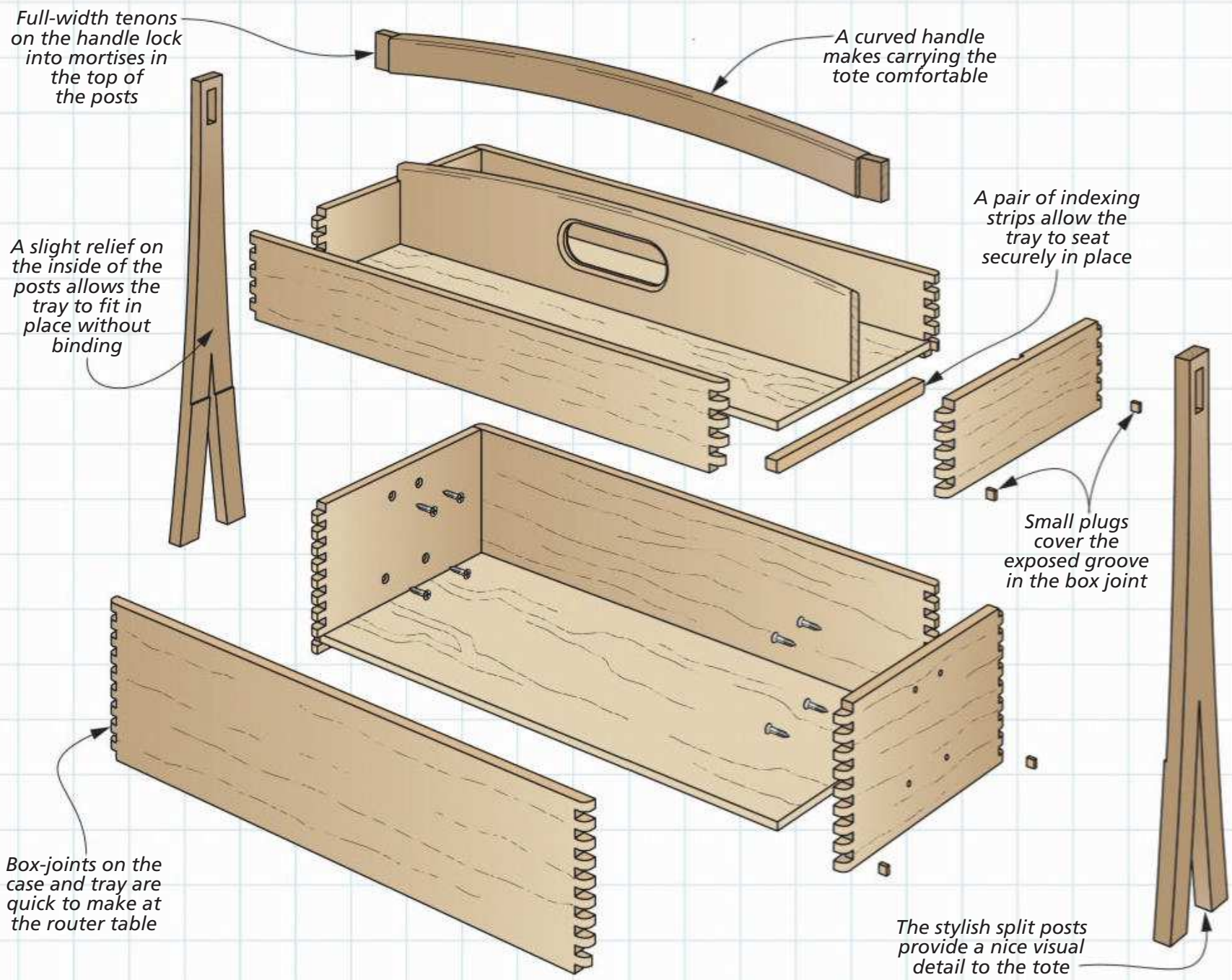

▲ The curved handle and properly proportioned posts make the tool tote comfortable to carry. The split posts and through tenons add stylish details not found in most tool totes.

▲ The box-joints add a pleasant contrast. A slight "relief" on the inside face of the posts allows the upper tray to slide into place without binding.

Illustrations: Dirk Ver Steeg

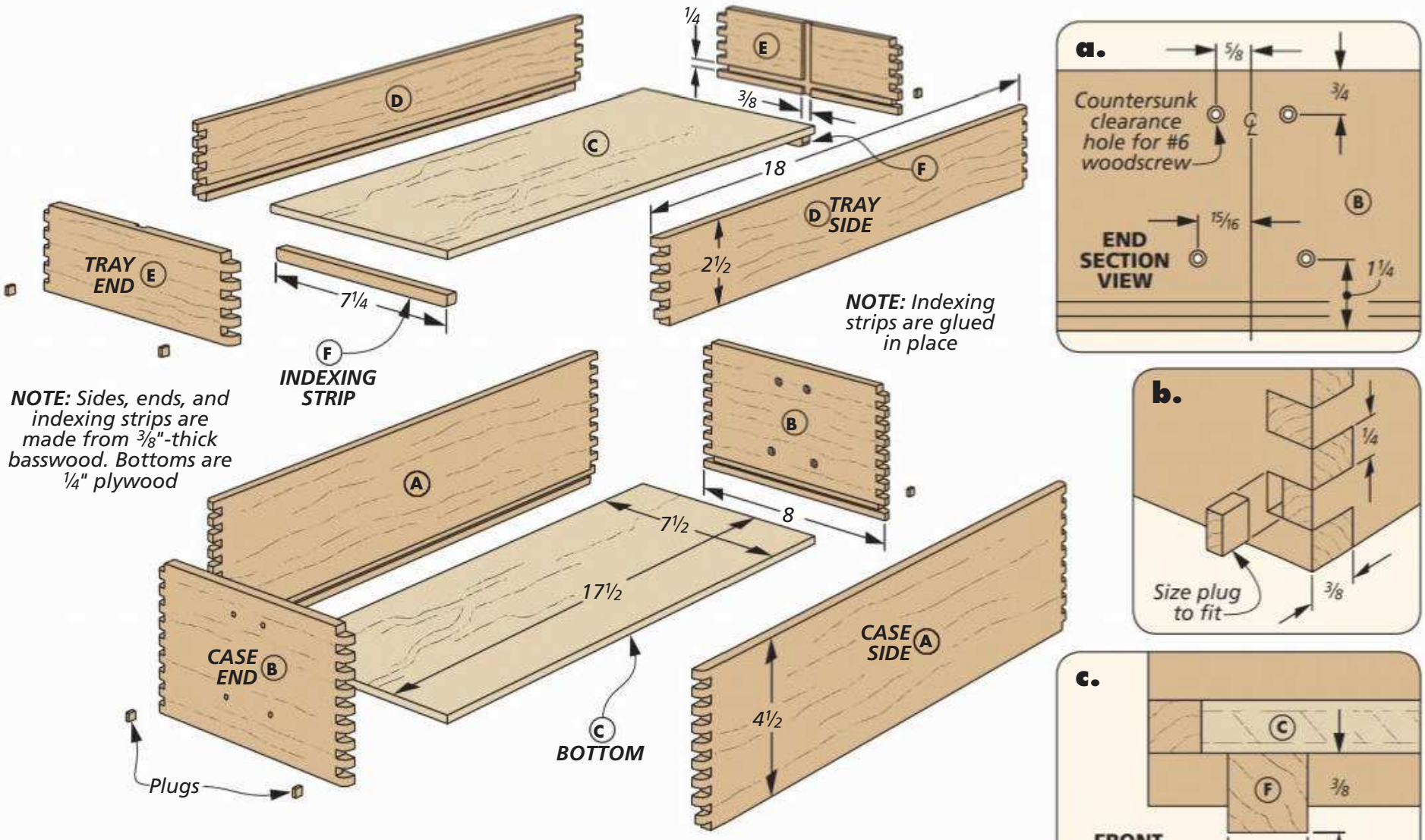

Making the CASE & TRAY

As I mentioned previously, the main case and the upper tray are both held together using box joints. A plywood bottom in both sections is housed in a groove in the sides and ends. A pair of indexing strips are attached to the underside of the tray to quickly position the tray on the lower case.

BOX JOINTS FIRST. I began building the case and tray by cutting the sides and end pieces to length. But I left them all a little wide for now. This leaves room for trimming the pieces to final width after the box joints are completed.

The beauty of box joints is they can be made using an easy-to-build jig at the router table. You'll find plans for a simple box joint jig at *Woodsmith.com*. For this project, however, I decided to try out a commercial box joint jig sold by *Rockler*. To read more about this jig and the process for getting clean, crisp box joints at the router table, check out the article on page 12.

How-To: ROUT THE BOX JOINTS

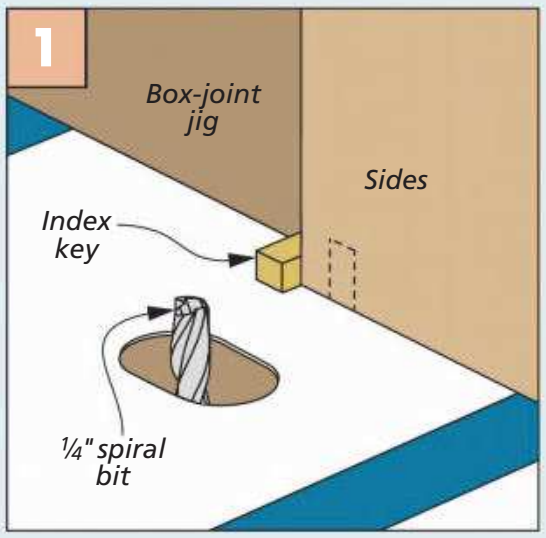

First Slot. With the workpiece butted against the index key, make the first cut in the end.

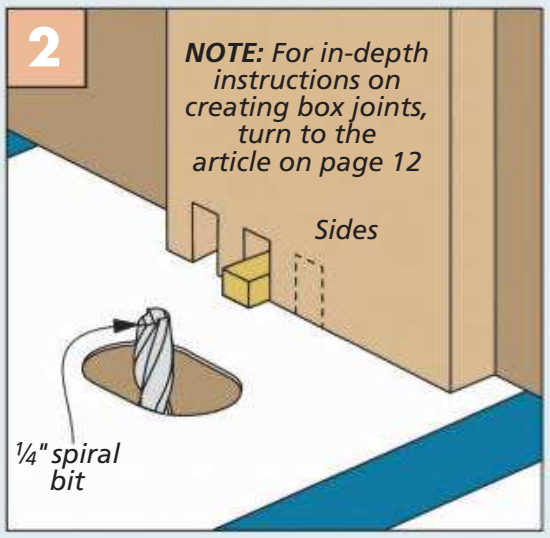

Continue Slots. After the first cut is done, "hop" the workpiece over the key and continue along the end.

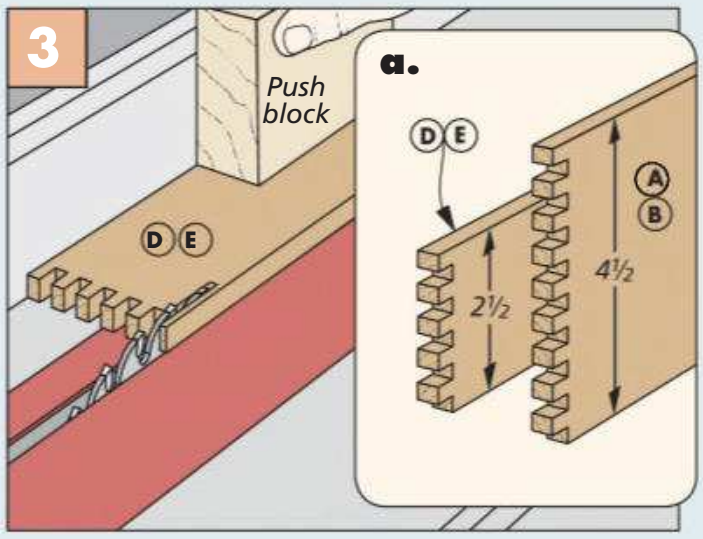

Size Parts. Rip the parts to width so the case and tray have a uniform look. In this instance, beginning with a pin and ending with a slot.

Once the box joints are completed, the case and tray parts can be cut to final width. Figure 3 on the previous page provides the information you'll need. Keep in mind that you want both the case and tray to have a uniform look, as shown in Figure 3a.

A LITTLE MORE JOINERY. Before gluing up the two tote boxes, a few more things need to be completed while the parts are still apart. First, head back to the router table to cut the shallow groove in the inside face of each part (Figure 1, below). These grooves hold the bottom in place.

You'll stay at the router table for the next process, as well. Here, use a miter gauge as a guide to cut a centered dado in both tray ends, as shown in Figure 2. These secure the tray handle shortly.

The final thing to do before assembling the boxes is to drill mounting holes in each case end for attaching the posts later on (Figure 3). Use the dimensions in detail 'a' on the previous page to locate the holes.

CAREFUL ASSEMBLY. After cutting the two plywood bottoms to size, it's time to glue each box together. Spread a liberal amount of glue in the box joint sockets before slipping the parts together. Be careful to keep your parts in the correct orientation as you bring them together. And don't forget to fit the plywood bottoms in place.

For the case, I used two band clamps to apply just a slight amount of pressure, as shown in Figure 4. A pair of cauls at each corner keep the clamps out of the glue that squeezes out.

PLUG THE HOLES. After the clamps are removed from the totes, you'll need to plug the small openings where the groove for the bottom extends through the sides and ends. Use an oversize blank to sneak up on the final size of these plugs (Figure 5) and then glue them in place.

SAND & ROUND. After sanding all of the box joint pins flush, make a trip back to the router table to round the corners of each box, as you see in Figure 6. This'll help keep the tote from snagging on clothing as you carry it around.

INDEXING STRIPS. The final pieces to add are two indexing strips on the underside of the tray. These strips keep the tray "locked" in place on the case. The main drawing and detail 'c' on the previous page provide all the information.

How-To: COMPLETE THE CASE & TRAY

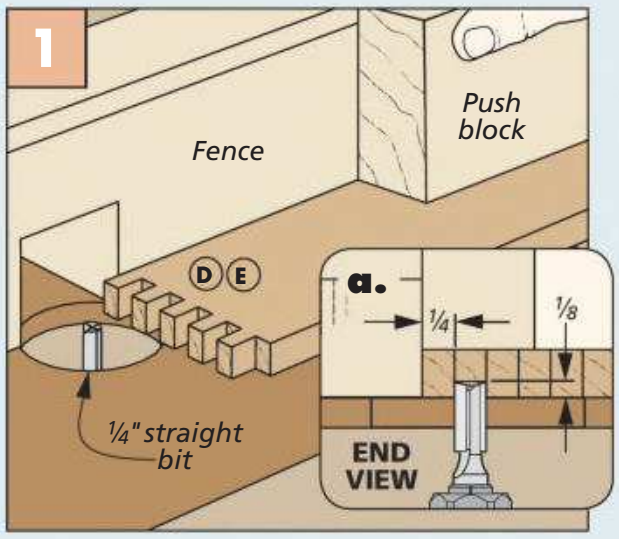

Groove for Bottom. Use the router table fence as a guide to make the groove in each piece for the bottom.

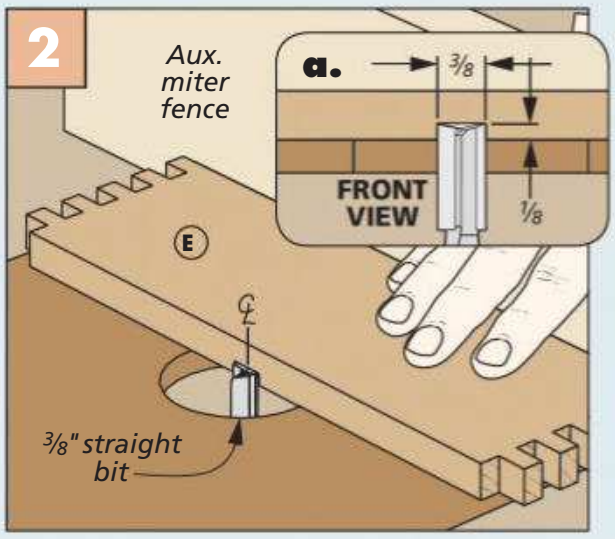

Tray Dadoes. Rout the centered dado in each end piece of the tray to hold the tray handle securely.

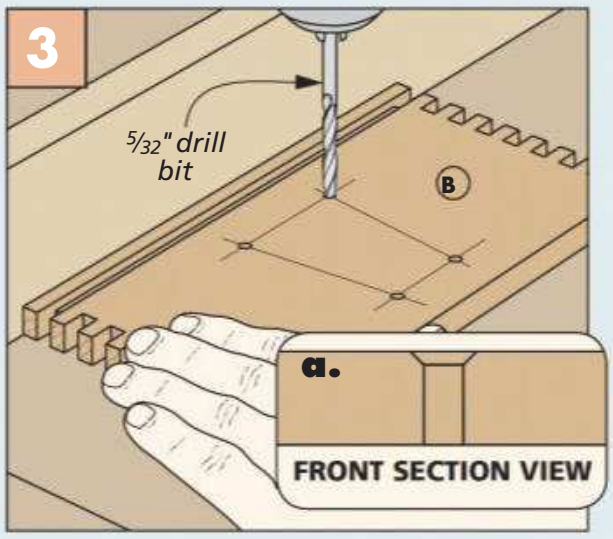

Mounting Holes. Before assembly, locate and drill the mounting holes in the case ends to secure the posts later.

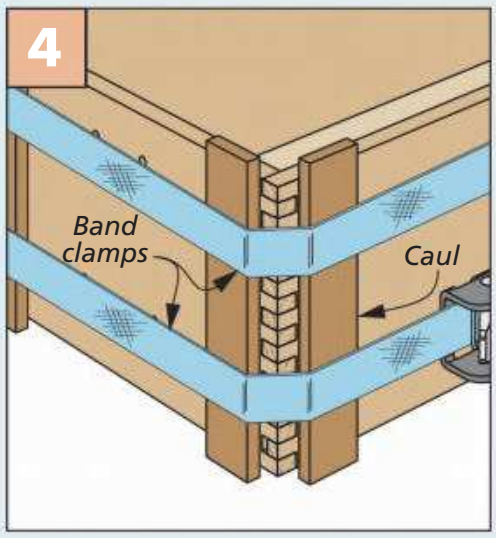

Light Pressure. A pair of wood cauls at each corner raise the band clamp above the joint.

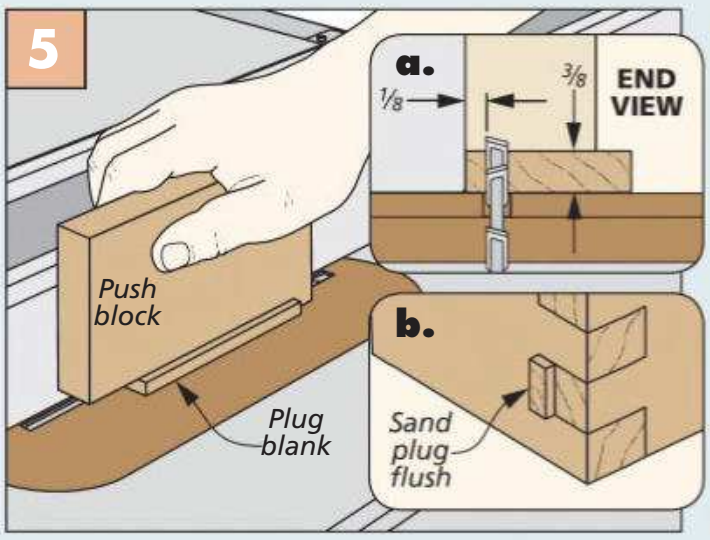

Fill Plugs. After planing a piece of stock to the proper thickness, rip long strips from one edge before cutting the individual plugs free.

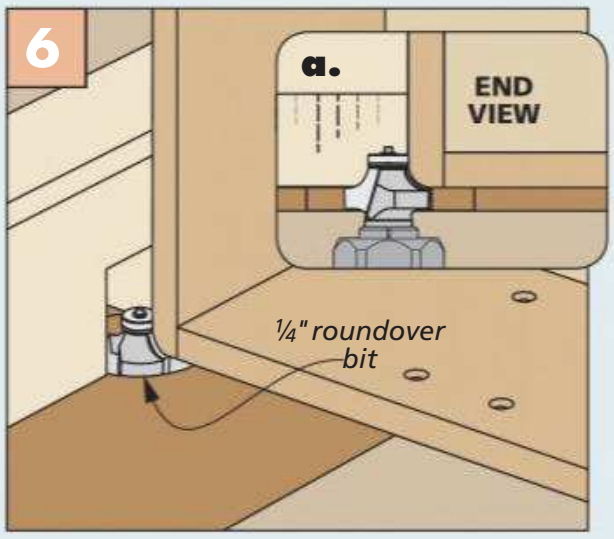

Round Corners. Use a roundover bit at the router table to soften the outside corners of the case and tray.

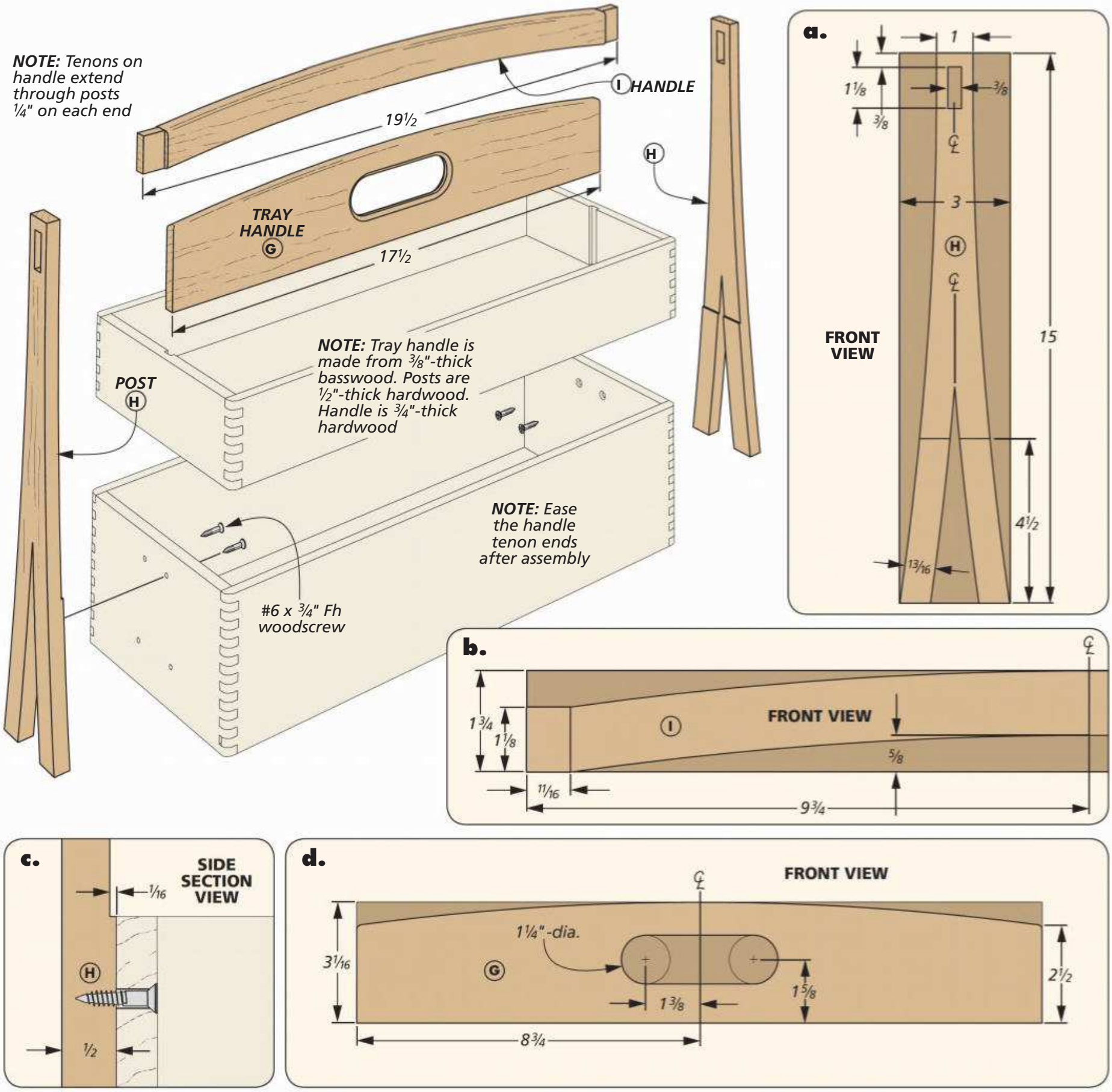

Adding the **HANDLES & POSTS**

With the completed case and tray in hand, it's time to add the handles to make them portable. The tray handle simply fits in the shallow dadoes you made earlier in the tray ends. For the case, however, a pair of long posts are needed to elevate the mounting point for the carry handle.

TRAY HANDLE. I decided to work from the inside out and began with the tray handle. Detail 'd' above shows all the dimensions you'll need for laying out the curve along the top edge, as well as the opening for the handhold. To make this opening, I first drilled holes at either end with a Forstner bit to define its length. It's then just a matter of removing the rest of the waste with a jig saw. Figure 1 at the top of the next page shows the process.

CURVED TOP. The curved top of the tray handle can be cut to shape at the band saw and sanded smooth. I used a sanding block to slightly ease the edges of this curve, but be sure to stop just shy of the ends. You can round the corners and ease these edges after the tray handle is glued in place in the tray.

TWO POSTS. After thicknessing the stock, I cut two rectangular blanks to size for the two posts. Detail 'a' above shows the size of the blanks. With the location of the through mortises

marked on each blank, head over to the drill press and remove most of the waste (Figure 2). The edges and corners can be cleaned up with a chisel.

SKIM CUTS. As I mentioned earlier, the posts have a shallow relief area on their inside face, but only on the part that sticks up above the top edge of the lower case. This relief area allows the tray to fit into place without rubbing and binding on the posts.

I turned to the router table loaded with a dado clean-out bit to make these cuts. Use a miter gauge to support the workpiece and work from the upper end of the post blank to the layout line, as shown in Figure 3. You'll want to maintain light downward pressure on the lower end of the blank to keep it flat on the table.

SHAPE POSTS. Now, cut the posts to shape at the band saw. Make sure the skim cut you just made is facing up so the workpiece lays flat on the saw table (Figure 4). Then sand the edges smooth. For the V-notch at the bottom of the post, I folded a piece of sandpaper over a putty knife blade to sand into the sharp corner.

HANDLE. The main handle that fits between the posts has a similar curve as the tray handle. But before shaping, I cut a blank to size and formed the full-width tenons on the ends (Figure 5). Now, cut the curves the same as before and sand out the saw blade marks.

After easing the edges of the handle, attach one post to the case with screws. Glue the handle in the mortise and fasten the other post to the case, capturing the handle between. At this point, this tool tote is ready for a finish. I sprayed mine with two coats of clear lacquer to let the natural wood shine through. W

How-To: MAKE THE HANDLES & POSTS

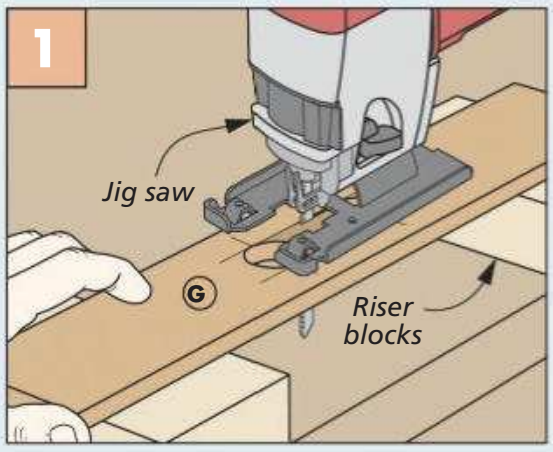

Handhold Cutout. After drilling a hole at either end, remove the rest of the waste with a jig saw.

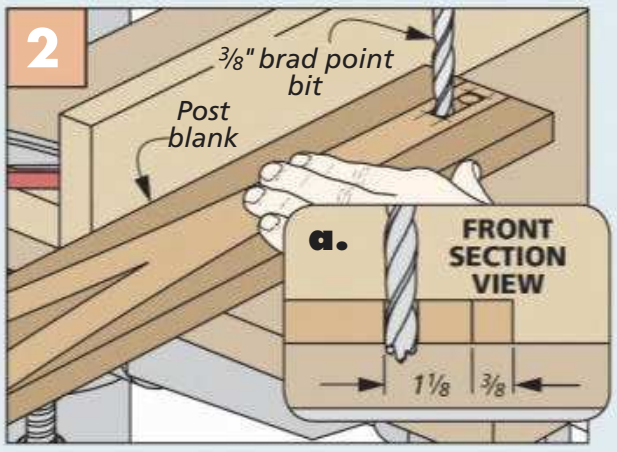

Through Mortise. Drill overlapping holes to remove most of the waste for the mortise at the top of the post.

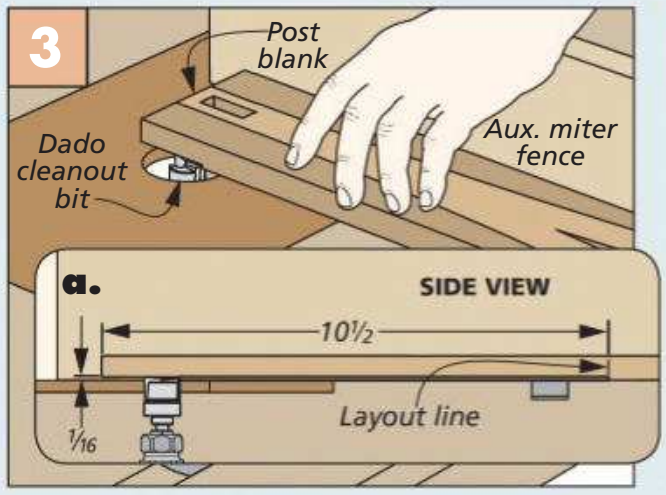

Router Skim. Make the shallow skim cut using a straight bit in the router table. Move from the top to the layout line.

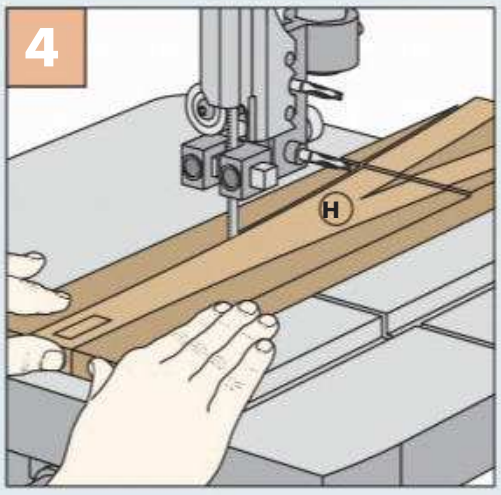

Cut to Shape. Head to the band saw to cut the posts to shape. Stay to the waste side of the line.

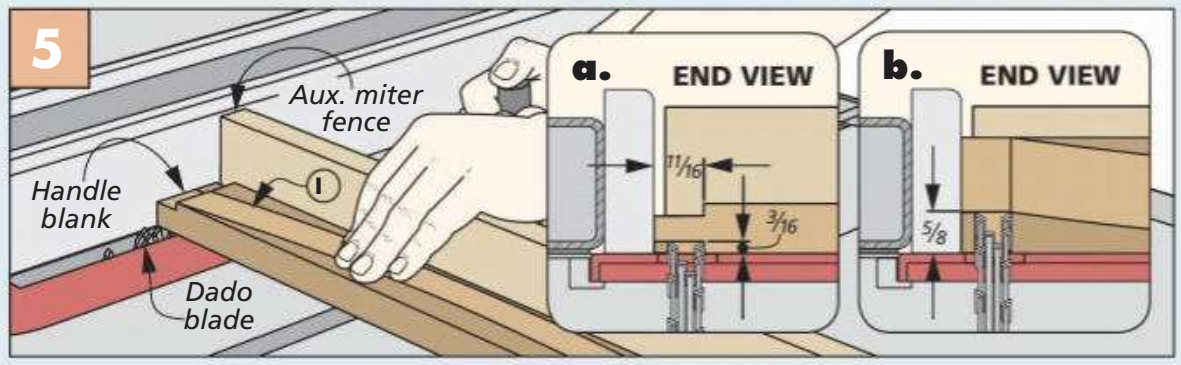

Handle Tenons. After cutting a blank to size for the handle, lay out the curve on one face. Then, use a dado blade at the table saw to form the tenons on either end of the blank. The curves are cut at the band saw.

Materials, Supplies & Cutting Diagram

A	Case Sides (2)	3/8 x 4 1/2 - 18
B	Case Ends (2)	3/8 x 4 1/2 - 8
C	Bottoms (2)	1/4 ply. - 7 1/2 x 17 1/2
D	Tray Sides (2)	3/8 x 2 1/2 - 18
E	Tray Ends (2)	3/8 x 2 1/2 - 8
F	Indexing Strips (2)	3/8 x 3/8 - 7 1/4
G	Tray Handle (1)	3/8 x 3 1/16 - 17 1/2
H	Posts (2)	1/2 x 3 - 15
I	Handle (1)	3/4 x 1 3/4 - 19 1/2

- (8) #6 x 3/4" Fh Woodscrews

Woodsmith GO ONLINE EXTRAS Plans for the box joint jig and post pattern available at Woodsmith.com

1/2" x 5" - 72" Basswood (Two Boards @ 2.5 Sq. Ft. each)

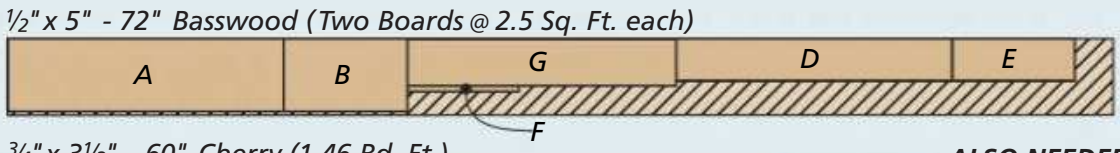

3/4" x 3 1/2" - 60" Cherry (1.46 Bd. Ft.)

ALSO NEEDED: *One 24"x24" sheet of 1/4" birch plywood*

Leather-back Campaign Chair

A heavy oak frame combined with simple construction and a hair-on hide creates a chair that's not only comfortable, but handsome as well.

The phrase "campaign furniture" describes furniture that was, historically, designed to be knocked down and packed for travel. This furniture was taken on military campaigns and added some comfort to the evenings. Drawing on those roots, we've designed this leather-back chair as a permanent fixture for your home. And, it's sure to become your favorite seat at the end of the day.

LEATHER SEAT AND BACK. The first thing you're likely to notice about this chair is the hide that is used for the sling style seat and back. The seat is suspended using a series of slots and dowels. We enlisted the services of a local leather shop to have our seat made. But, if you'd like to try your at hand making your own, we've included a few pointers on page 33.

ROCK-SOLID JOINERY. As I mentioned, campaign furniture was originally designed to be taken apart. For this chair, however, we decided to step away from tradition. This chair is designed to be permanently assembled. To accomplish this, dowel joinery makes a simple, but strong joint. The construction of the chair begins with patterns for the different parts, and that's where we begin.

Written by: Logan Wittmer; Project Design: Dillon Baker

Construction Overview / OVERALL DIMENSIONS: 29"W x 30"H x 28"D

Face-grain plugs conceal screws on armrests

A double layer of hair-on cowhide seat is durable and comfortable

Dowels pass through the leather seat to attach it to the chair frame

Dowel joinery creates a simple, no fuss joint

Through slots and mortises are simple to cut with a router

Curved stretchers mirror the natural curve of the leather seat

NOTE: Sources on page 66 provides information on leather and leather tools

A heavy, hardwood frame creates a stout base, while staying in the spirit of campaign furniture

Wedged tenons secure the stretchers to the legs and add a decorative detail

NOTE: Our chair seat was stitched by a local leather shop. If you'd like to make your own, see page 33

Keeping in the traditional campaign furniture style, the leather seat is easily removed. The loops of the seat pass through the slots in the frame and are held in place by four dowels.

A hair-on hide makes a beautiful and comfortable seat. The natural and unique hair pattern on each hide offers an opportunity to experiment with textures and patterns.

Illustrations: Dirk Ver Steeg

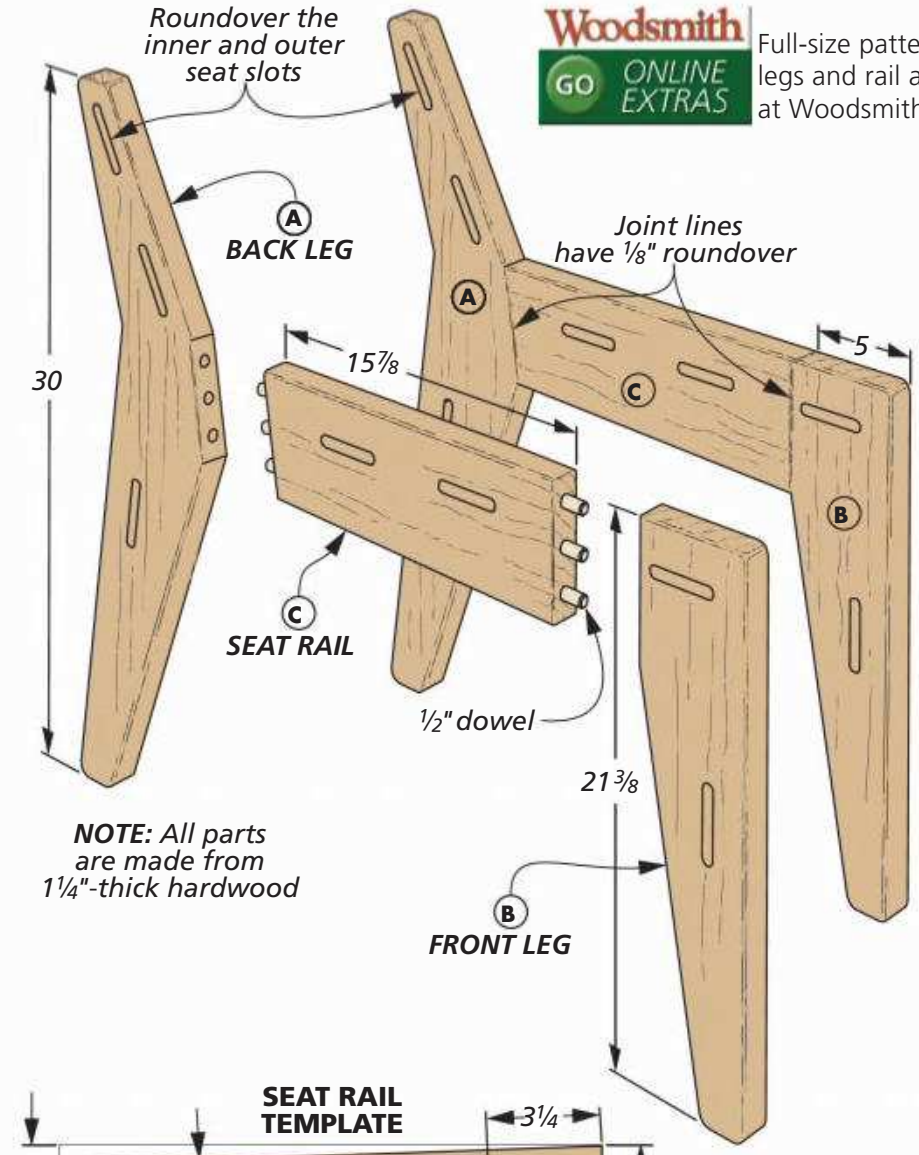

Woodsmith GO ONLINE EXTRAS Full-size patterns for legs and rail are available at Woodsmith.com

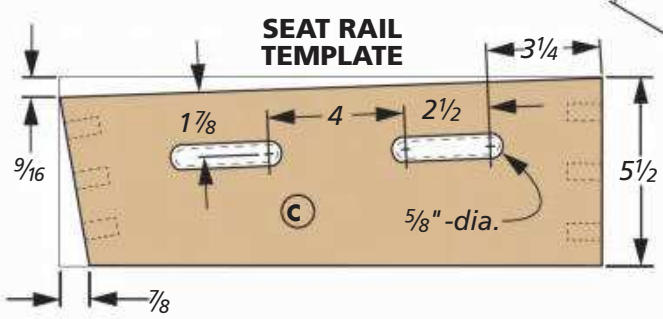

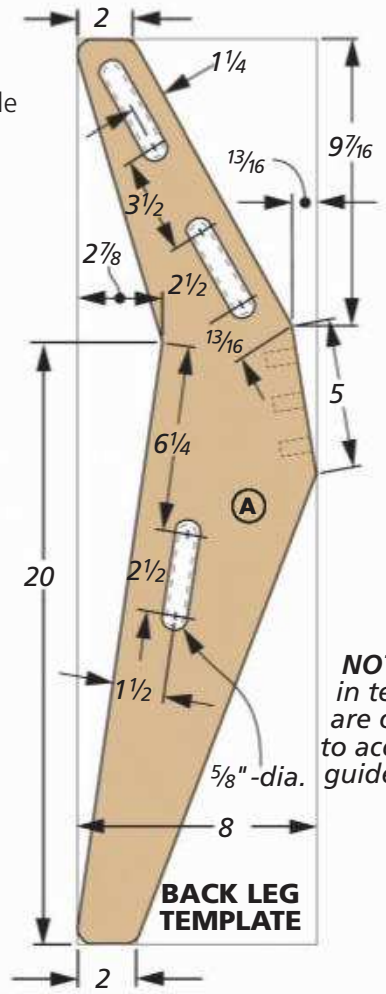

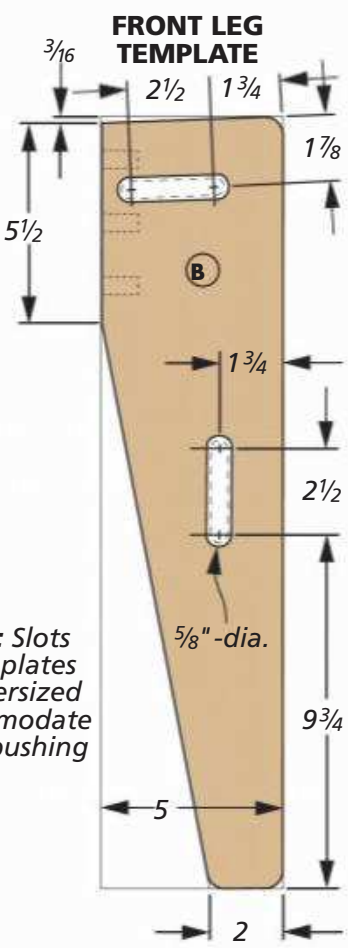

NOTE: Slots in templates are oversized to accomodate guide bushing

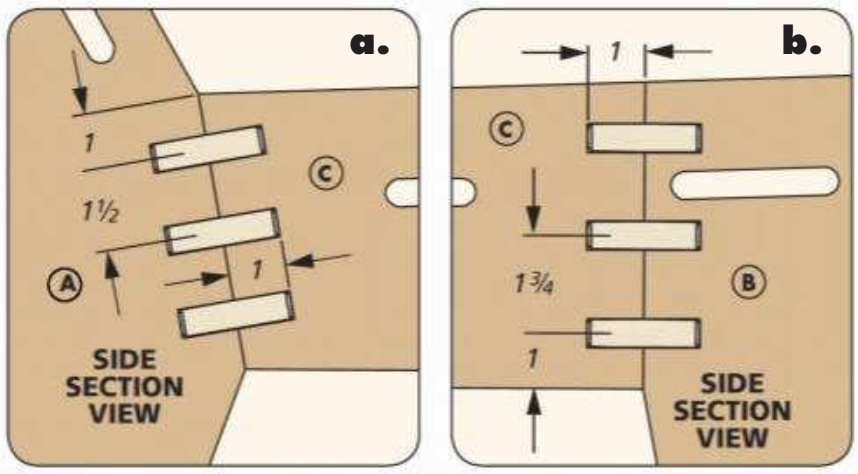

Building the FRAME

The frame of the chair is made from thick red oak. The beefy stock, combined with solid joinery, makes the frame of the chair a solid foundation. The frame consists of two sides that are identical, and I chose that as a jumping off point for this project.

PATTERNS TO START. Looking at the main drawing above, it may seem as though all the parts for the chair sides are easily cut and joined together. However, upon further inspection, you'll notice that each of the parts and joints meet at slightly different angles. While these angles aren't difficult to cut (and you could lay out the parts with careful measurements and some fine-tuning of the fit), this was the perfect opportunity to keep it simple. And in this case, simple means employing a set of routing templates.

Because the sides of the chair are mirror images of each other, you only need to make three templates for the chair base. The templates allowed me to make multiple parts of the same shape. And by including the slots and mortises with the template, I was able to also cut the joinery for the seat with the same template.

CHOOSING A TEMPLATE MATERIAL. I started by laying out the templates. Because I will be using a guide bushing and flush trim bit to rout around the template, I wanted to make sure that the template was thick enough to both provide a surface for the bearing of the bit, as well as clearance for the guide bushing. In this case, I chose to use ¼" hardboard. It allows enough room for the guide bushing but is also hard enough that a flush-trim bit bearing won't damage it.

I cut the hardboard templates to rough shape at the band saw and smoothed out the profile using a file and sandpaper. To cut the slots for both the seat and the mortise location, I started by drilling the ends using a Forstner bit. Just remember the template slots will be slightly larger than the finished slots to accommodate the guide bushing. Then, it's a simple matter of removing the waste with a jig saw and smoothing out the cuts.

LEG STOCK. With the templates ready to go, I used them to lay out my parts from stock that I planed to thickness. What I was looking for was a pleasing grain pattern on each of the parts. Because of the shape, the back leg requires a wide blank. If you can find stock wide enough, you can cut this from one solid piece.

If you don't have access to wide stock, you can glue up the back leg using a few narrower pieces. Just make sure to glue up the blank before planing it down to final thickness.

A ROUGH TRIM. Once I was happy with how I had the parts laid out, it was time to make some sawdust. I started by marking the part shape using the template. Then, each part was cut to rough shape at the band saw (Figure 1). When done, the template was applied with double-sided tape.

At the router table, I installed a flush-trim bit to complete the final shaping. Figure 2 shows the setup for this process. You'll do this for all four legs and the two seat rails.

GRAB A BUSHING. Now, you still have more work to do before you remove the template. This consists of routing slots for the seat and the mortise for the front and back stretchers, which will be added later.

The slots are easy to cut with a plunge router equipped with a spiral up-cut bit and a guide bushing (Figure 3). The key here is to make multiple passes to get through the stock cleanly without burning. Finally, you can remove the template and round over the slots for the seat, as seen in Figure 4. Make sure to leave the mortise edges square.

FOOL-PROOF JOINERY. With the legs and rails completed, it's a good time to check the fit between the parts. After clamping the parts together, I marked the location of the dowels across the joint lines (details 'a' and 'b' on the previous page). Then, it's a simple matter of using a doweling jig to drill the dowel holes, as shown in Figure 5.

Before assembling the chair sides, the last order of business is to rout a small roundover along each joint line. Now, glue the dowels into one side of the joint and then apply glue to the other half of the dowels. A pair of long clamps holds the joint tight while the glue dries. Before marching onto making the stretchers of the chair, I went ahead and wrapped up the sides by routing a larger roundover along both faces of the perimeter (Figure 6).

How-To: SHAPE THE FRAME SIDES

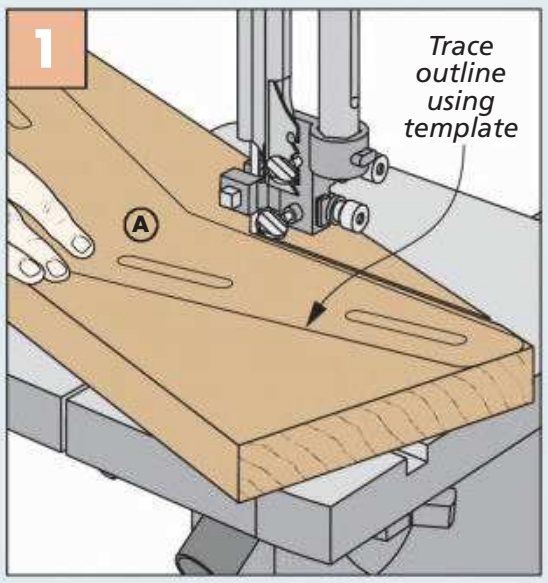

Rough Cut Parts. A band saw will quickly rough out the parts. Stay on the waste side of the layout lines.

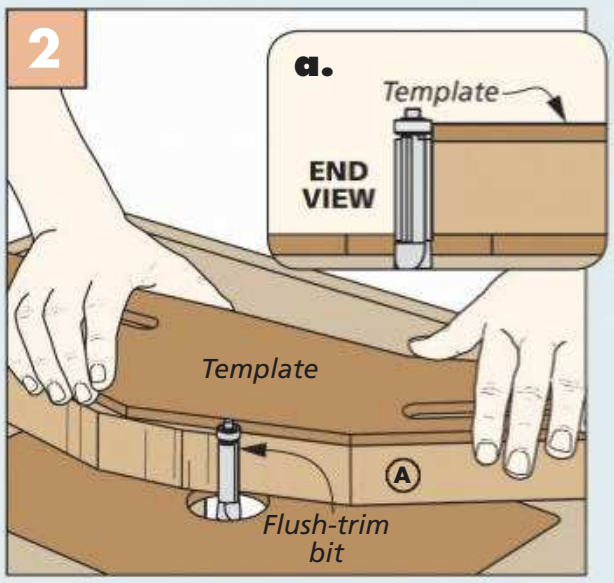

Trim to Size. At the router table, use a flush-trim bit to rout around the template, and bring the workpiece to final size.

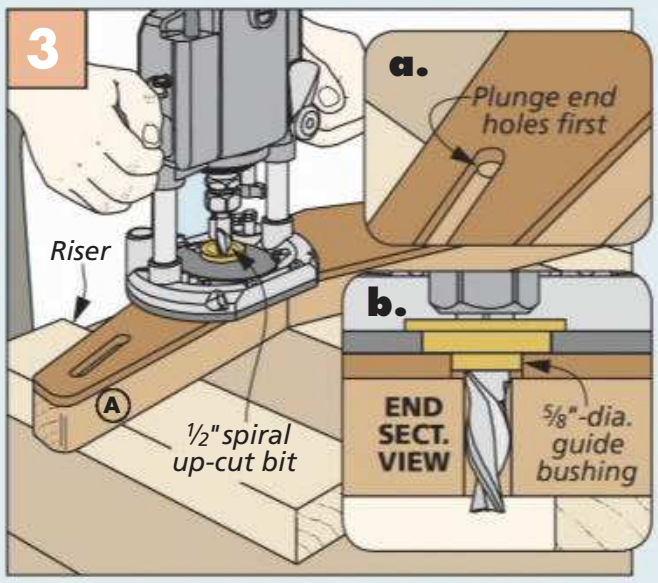

Rout Slots. With the template still attached, rout the slots for the seat and mortises using a spiral bit and bushing.

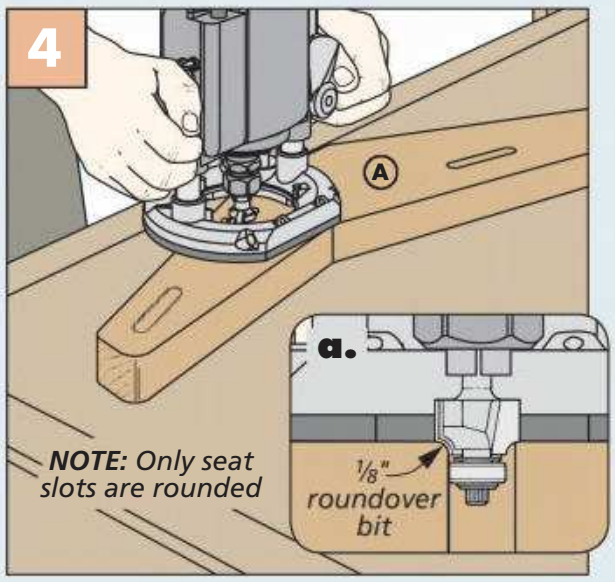

Round Over Slots. Remove the template and round over the slots for the chair seat, but not the mortises.

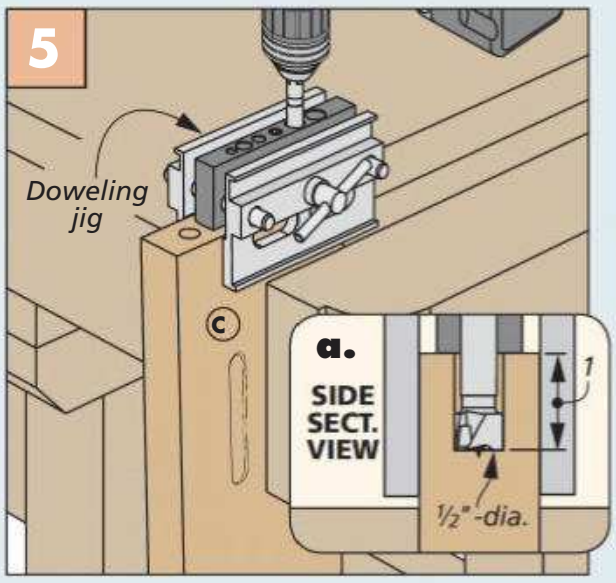

Dowel Holes. Use a doweling jig to drill the dowel holes in each piece of the chair base.

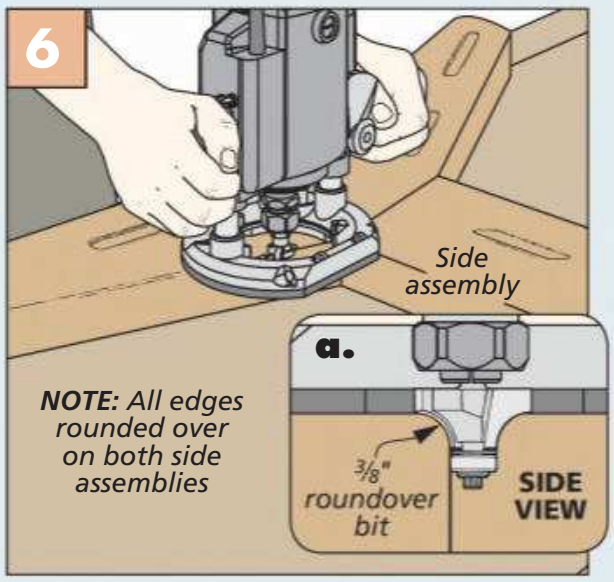

Round Over Frame. After the chair sides are assembled, soften the edges using a roundover bit in a router.

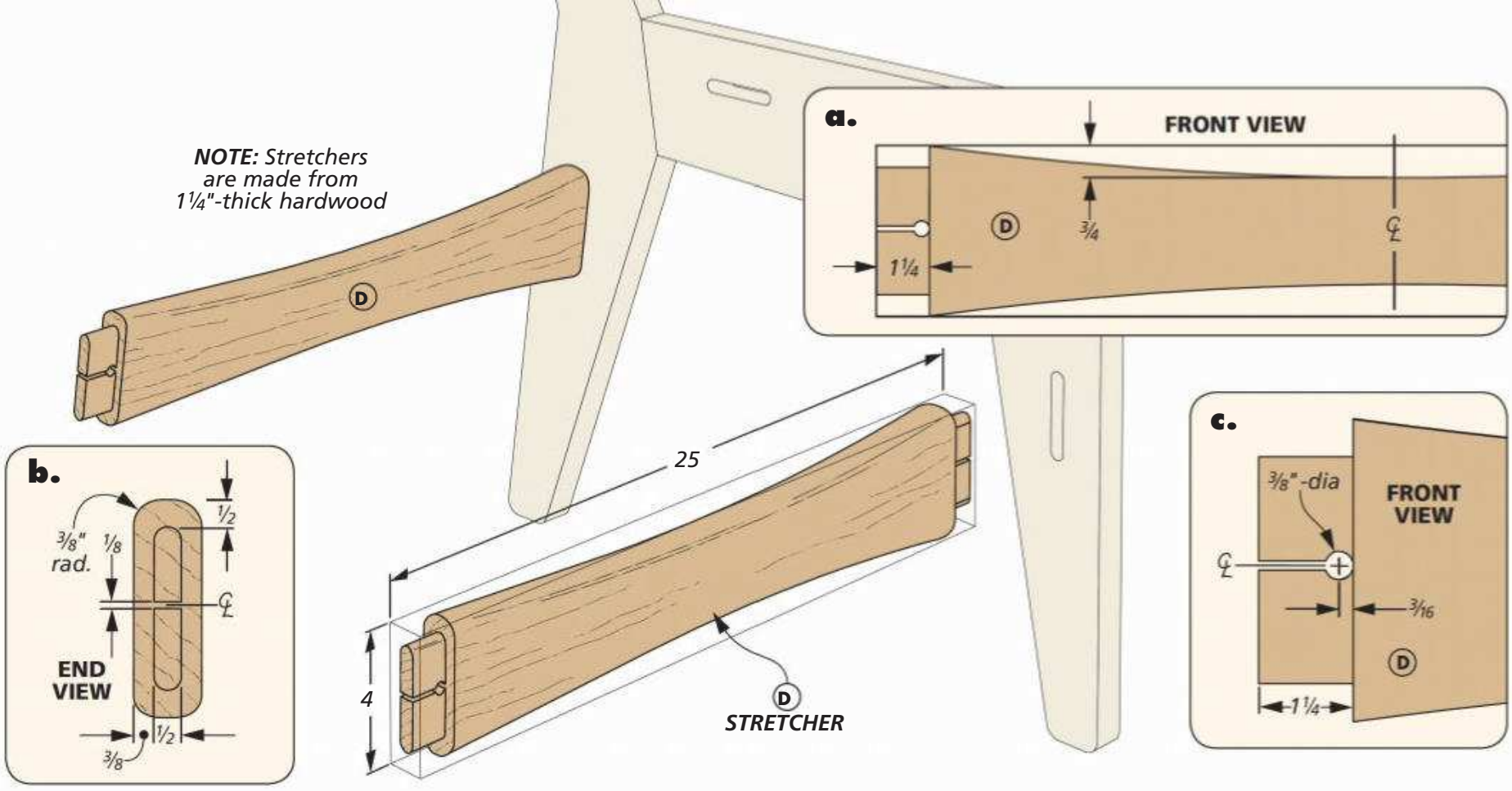

Adding the STRETCHERS

With the chair sides complete, you're well on your way to having a chair. Next up on the to-do list is a pair of stretchers. These will connect the two side assemblies using the mortises that were cut in the front and the rear legs. In a true campaign chair, these stretchers would be held together with a tusk tenon so the chair could be taken apart for travel. Here, however, we've created a fixed wedged tenon joint for a permanent assembly.

START THEM SQUARE. The stretchers start off as square blanks that have been planed to thickness. To cut the tenon on each end, I loaded a dado blade in my table saw and removed the waste in multiple passes. Figure 1 shows the set up for this process. Because the mortises on the legs are rounded, the edges of the tenons need some work to fit. This starts at the router table with a roundover bit and finishes with a little bit of hand work. Shop Notes on page 64 will walk you through the entire process, and detail 'b' above shows the shape you're going for.

ROOM FOR A WEDGE. The final details to take care of on the stretchers are a small kerf for the tenon wedge and the gently curved shape. Cutting the kerf is straightforward. But first, I drilled a hole in the tenon, as seen in Figure 2. This keeps the tenon from splitting when the wedge is driven in place. Then, a narrow kerf is cut at the band saw. Detail 'c' shows how the final product will look.

Tackling the curve is the last item before the chair can be assembled. After laying out the arc, the waste is removed at the band saw (Figure 3). Then, a little hand sanding takes care of any leftover saw marks. Finally, round over the edges of the stretchers.

MAKE WEDGES & ASSEMBLE. Assembling the chair base is little more than gluing the stretcher tenons into the matching

How-To: MAKE THE STRETCHERS

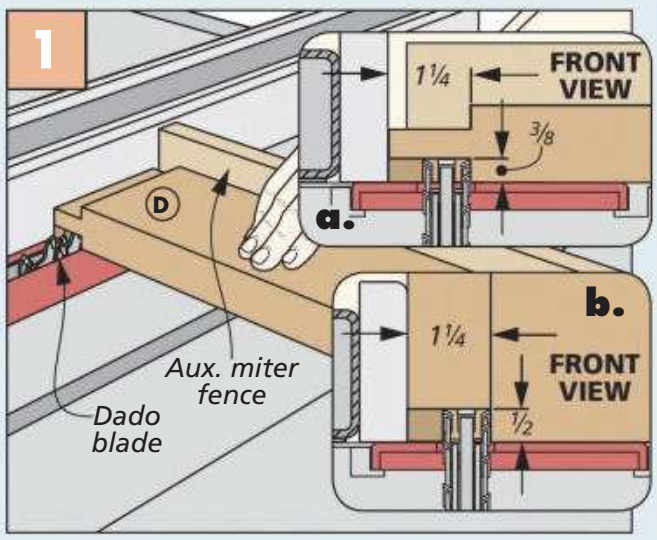

Cut the Tenons. At the table saw, cut the tenons on the ends of the square stretcher blanks.

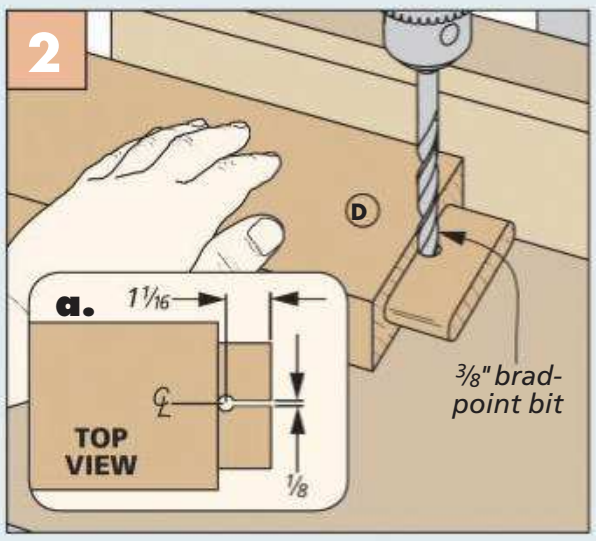

Relief Hole. Drill a hole through the face of the tenon to stop the wedge from splitting the tenon.

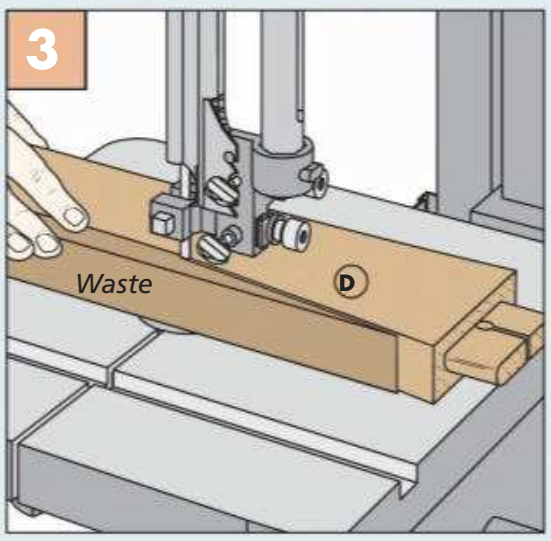

Cut Stretchers to Shape. Using the band saw, cut the stretchers to shape and then sand them smooth.

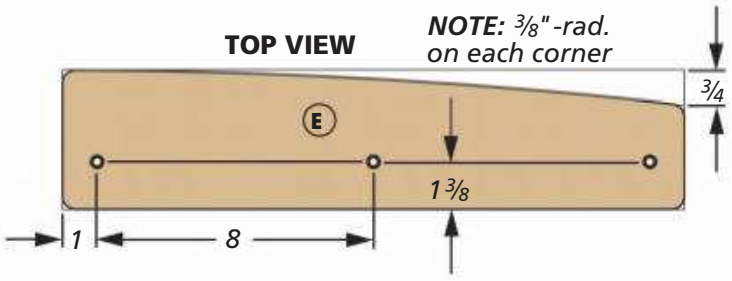

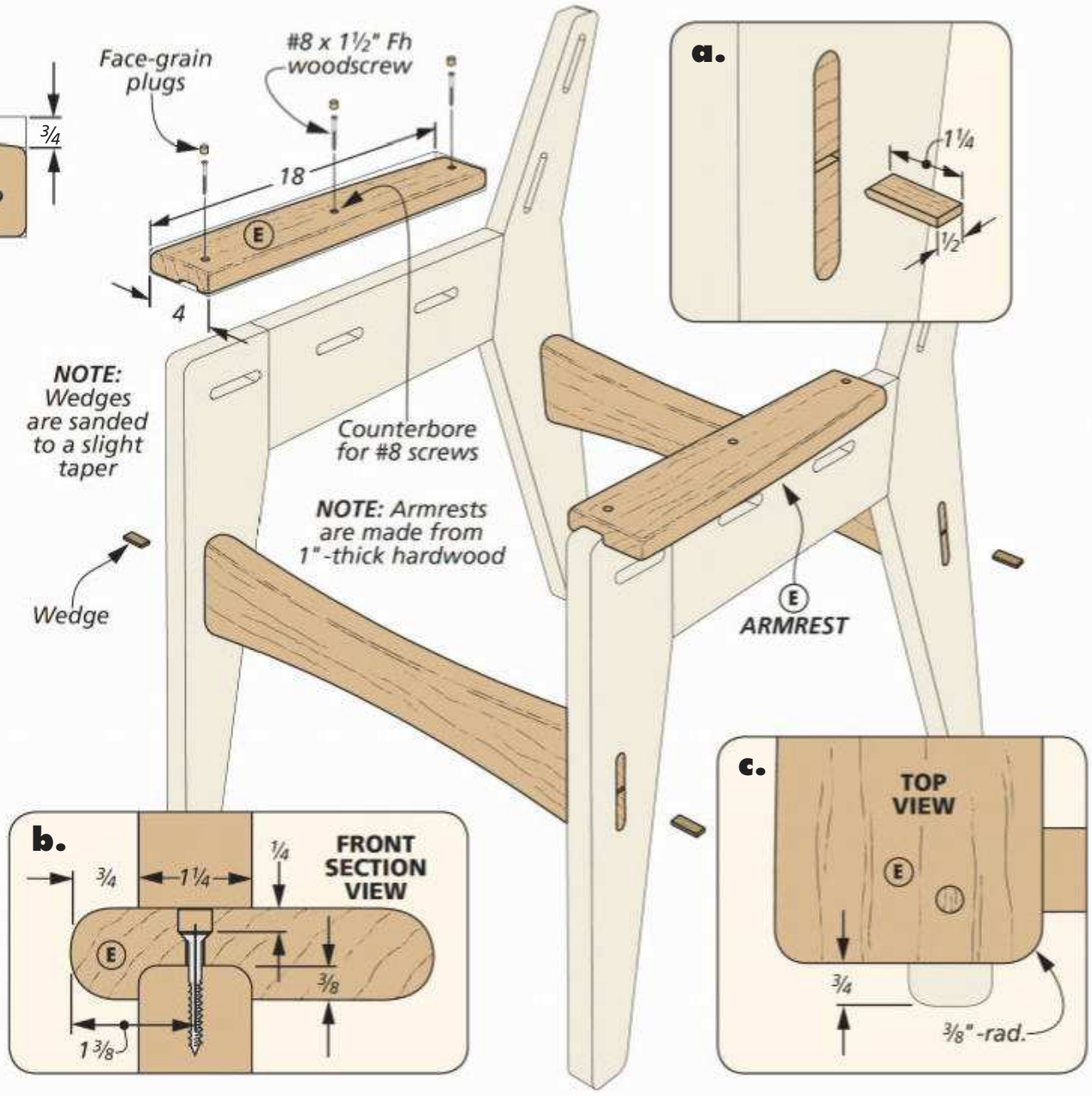

mortises on the legs. When you make and drive the wedge into the tenon, use a little glue and keep the clamps in place until it's fully seated. Then trim it with a hand saw and sand it flush.

ARMRESTS

From a woodworking standpoint, you're almost done with the chair. The final item to add is, in my opinion, one of the most important parts of a chair. And that's a pair of comfortable armrests.

ROUNDED GROOVES. To start, you'll want to cut a groove down the length of the armrest blank to hug the side frames, as shown in detail 'b' at right. The trick here is to create a groove that matches the radius of the frame so it seats snugly with no gaps.

I chose to start at the table saw and remove most of the waste with a dado blade. Then at the router table, you can use a core box bit to make a final pass and round the edges of the groove. The setup I used is shown in Figure 1 below. Just check the fit as you go, and make additional small passes until the arm fits snugly. After cutting the armrest to final shape (Figure 2), I rounded over all of the edges of the armrests with the same profile as the chair frame.

PLUGS. To keep the armrests from loosening over time, I attached them with glue and screws. The screws are counterbored to accept the facegrain plugs.

Speaking of plugs, the trick to concealing plugs and making them disappear is to take your time and match the grain of the plugs as closely as you can to the grain of the armrest. The photo below shows how I cut the plugs from a blank. Then, after gluing the armrest in place, drive screws into the chair frame. I used hide glue to install three plugs into each arm. The dark hide glue blends in well with the wood. After sanding the plugs flush, you can turn your attention to crafting the leather seat.

How-To: SHAPE THE ARMREST

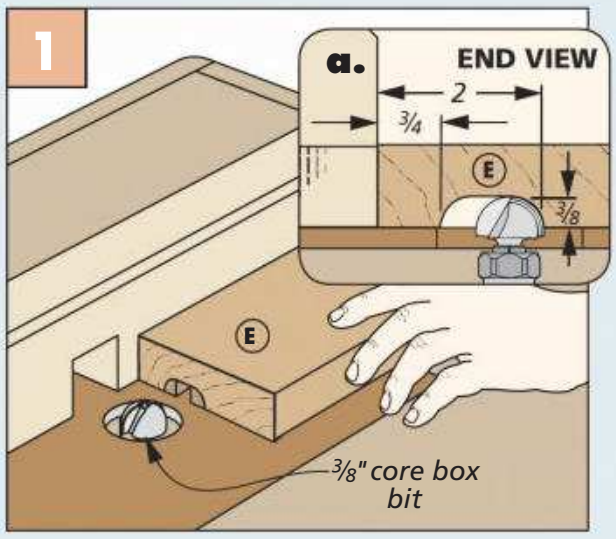

Armrest Groove. Use a core box bit to finish cutting the groove under the armrest to match the chair frame sides.

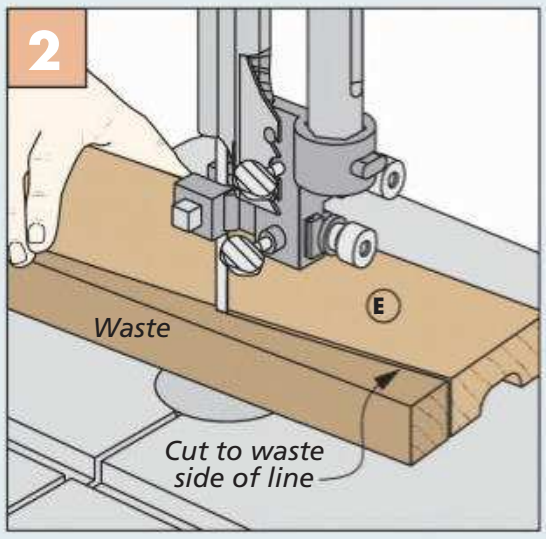

Shape the Armrest. After finishing the groove, cut the armrest to final shape at the band saw.

For nearly invisible face-grain plugs, pay special attention to grain direction and match the grain as close as you can.

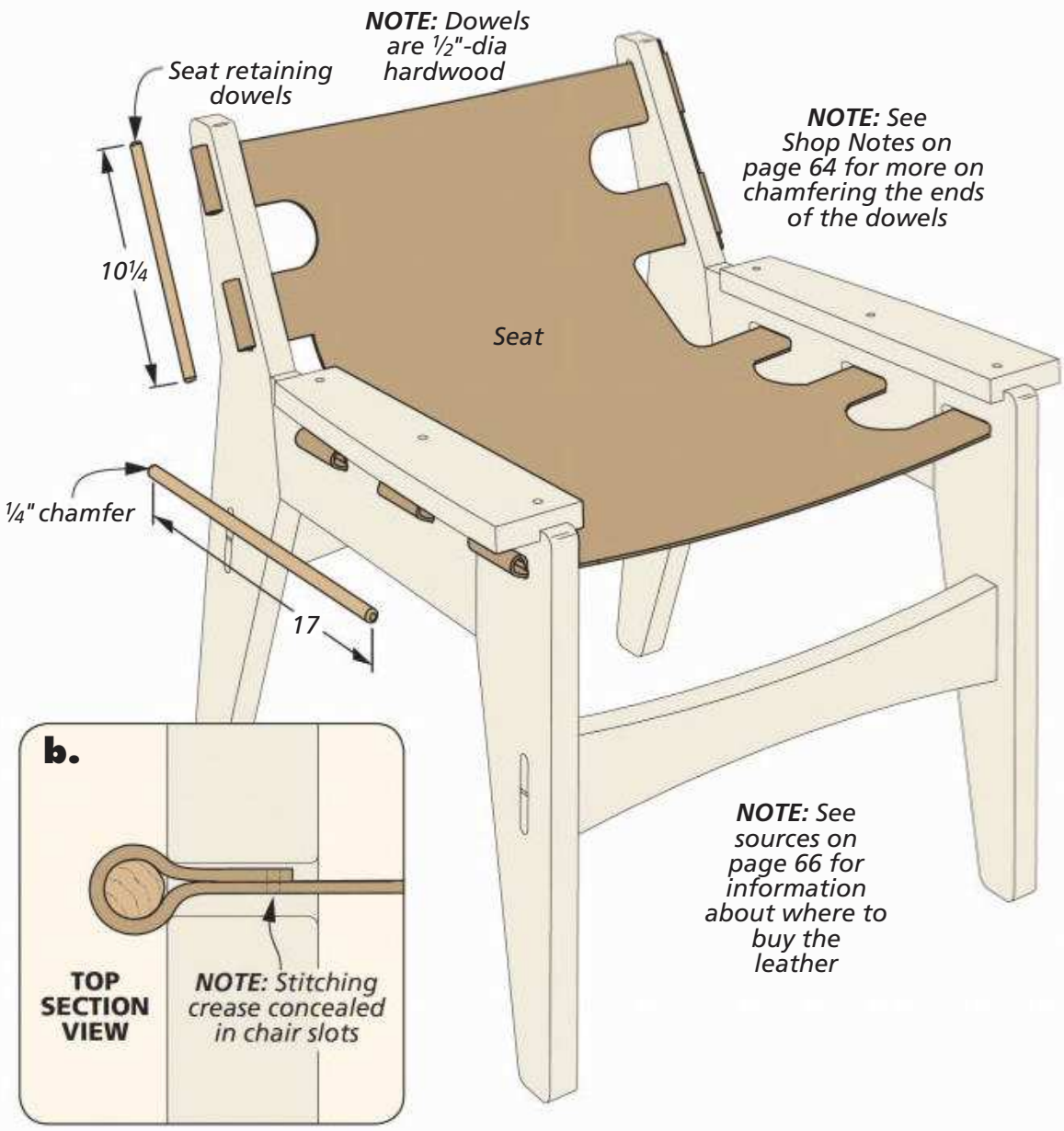

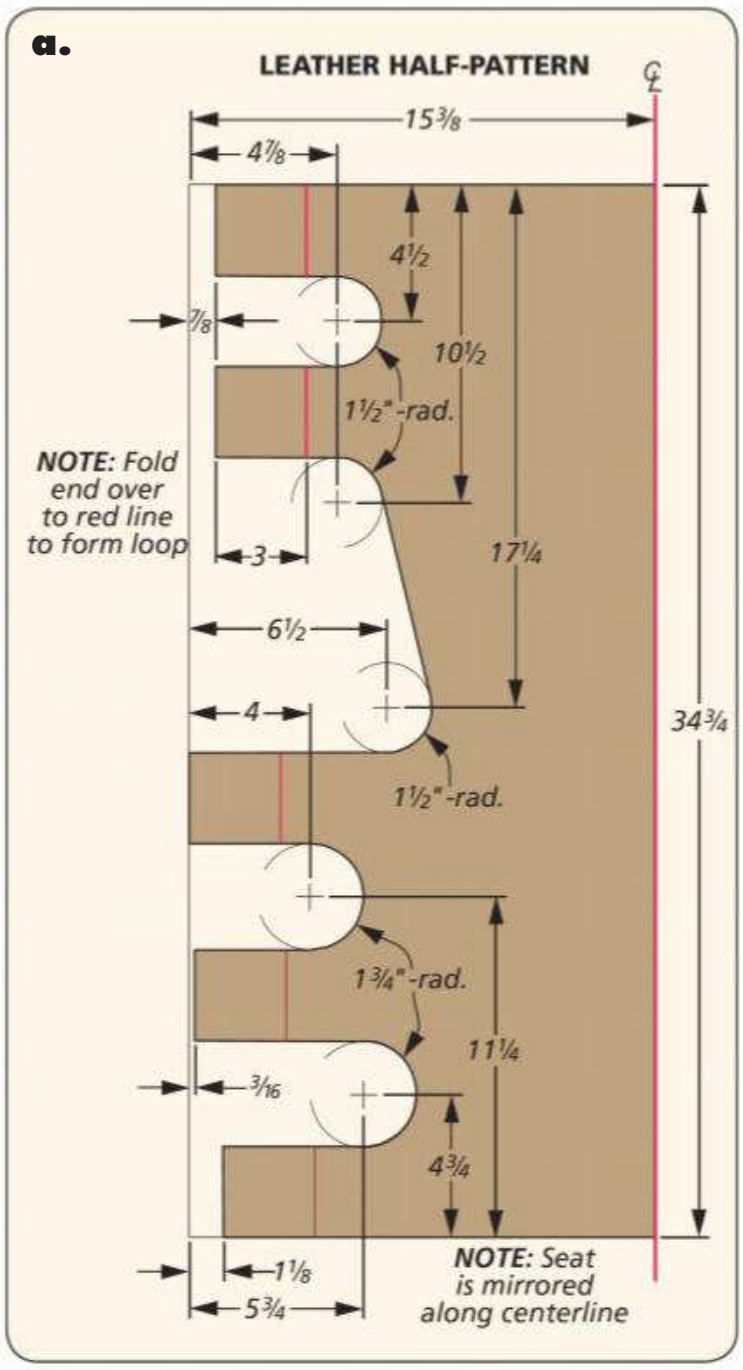

Making the CHAIR SEAT

The leather I chose for the chair was a hair-on cowhide. And I decided to use two pieces, back-to-back, so I had hair on both sides of the seat. When working with a hair-on-hide, it's easiest to bring the cut hides to a leather shop that can stitch the two pieces together and sew the loops through the hair. If you would like to tackle the seat yourself however, using a piece of regular vegetable-tanned leather will be easier to work with.

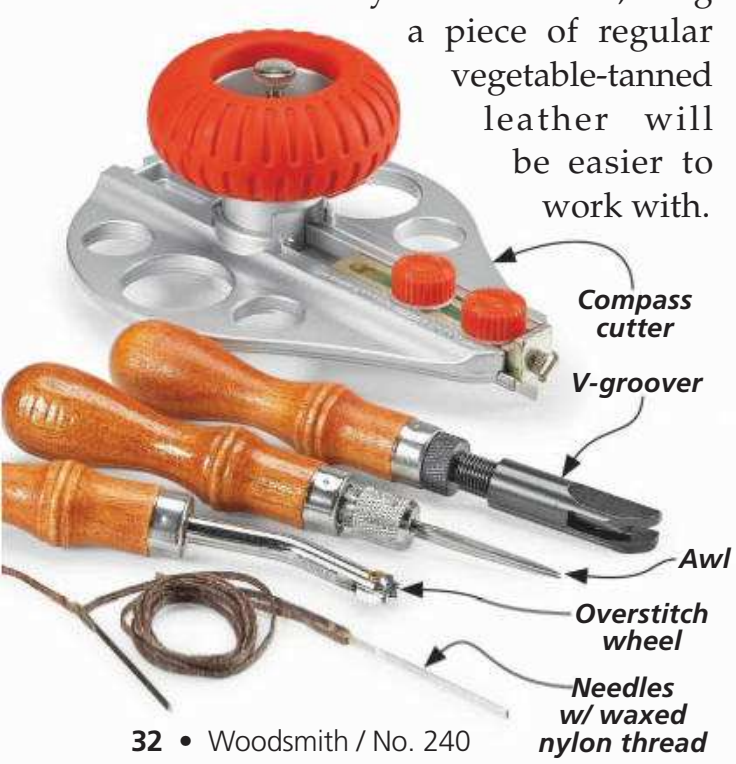

CUTTING THE SEAT. Making the seat starts with the pattern shown in detail 'a'. While it's large, this pattern is easily laid out on a piece of leather with some careful measuring. After the layout is done, you can break out another set of tools and start cutting the seat. Don't worry, these are pretty common leatherworking tools, as seen in the photo below. And you can find where to purchase them in Sources on page 66.

I started by using a compass cutter to cut the radii on the inside of the loops. Then, all of the straight cuts are easily made with a wheel cutter or a sharp utility knife. Figures 1 and 2 on the next page shows how I did these.

SEWING THE LOOPS. To create the loops that hold the dowels, the leather is folded back on itself. To stitch the loops, start off by laying out the stitch lines and cutting grooves for the stitches, as shown in Figure 3. Then, use an overstitch wheel and an awl to make the stitching holes (Figure 4). Finally, the loops can be sewn using heavy-duty waxed nylon thread. A simple saddle stitch is the ticket here. It's strong and easy to do (Figure 5). If you've never sewn leather before, don't worry. There's a video at *Woodsmith.com* that shows the saddle stitching process in depth.

ASSEMBLE THE SEAT. Now that you have a handsome seat finished, it's time to assemble your chair. The seat is held in place using a series of dowels. I began by cutting the dowels to length and chamfering the ends. You can read how I chamfered them in Shop Notes on page 64. To attach the seat to the base, simply insert the loops of the seat through the slots in the base. Then, slide the dowels in to lock the seat in place (Figure 6).

After taking the long-awaited trial sit in the chair, the only thing left is to select a finish. Then, sit back, relax, and doze off. Because you've earned it. W

How-To: CUT & STITCH THE SEAT

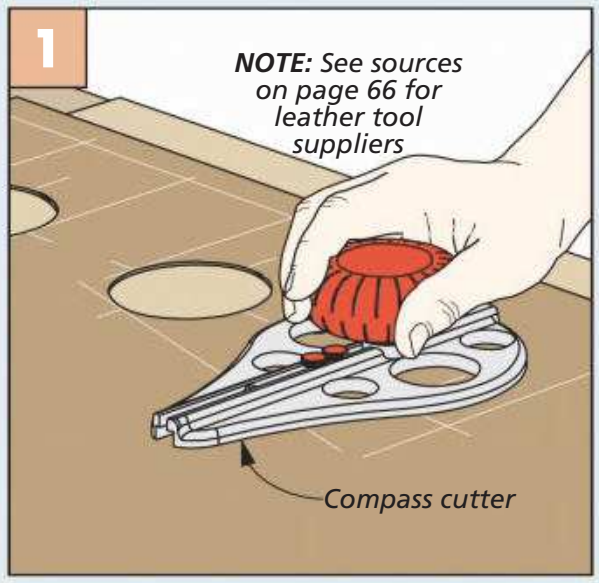

Radii. Use a compass cutter to cut the inside radii of each of the loop locations. Use sharp blades for clean cuts.

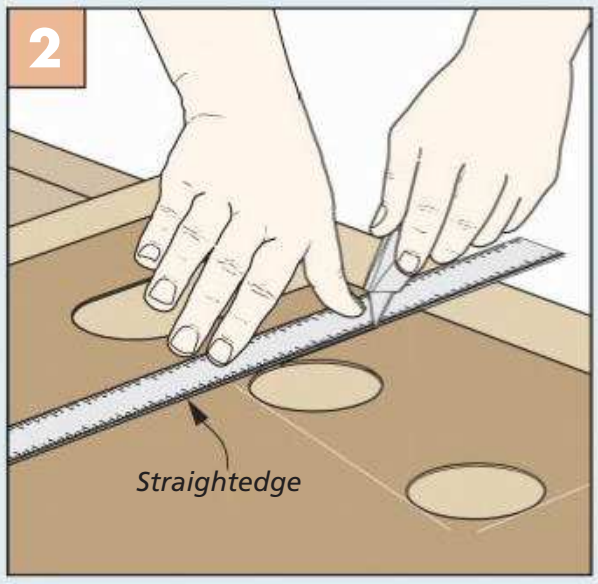

Remove Waste. Cut the waste from the leather loop locations with a sharp utility knife and a straightedge.

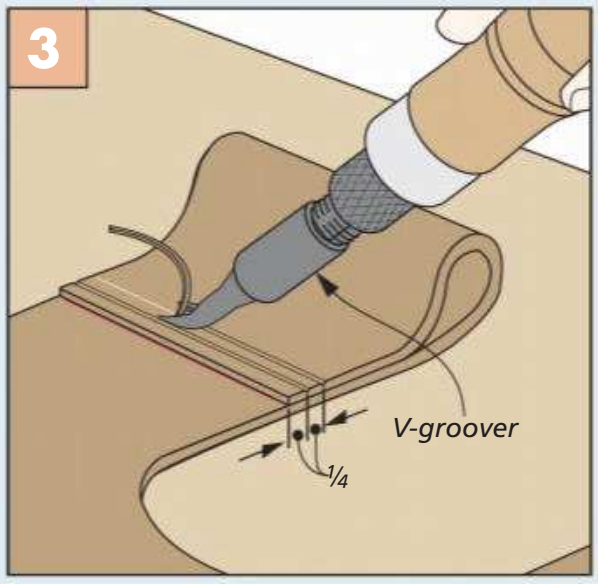

Stitch Grooves. Fold the loops over and mark the stitch locations. Cut two shallow grooves for the stitches to sit in.

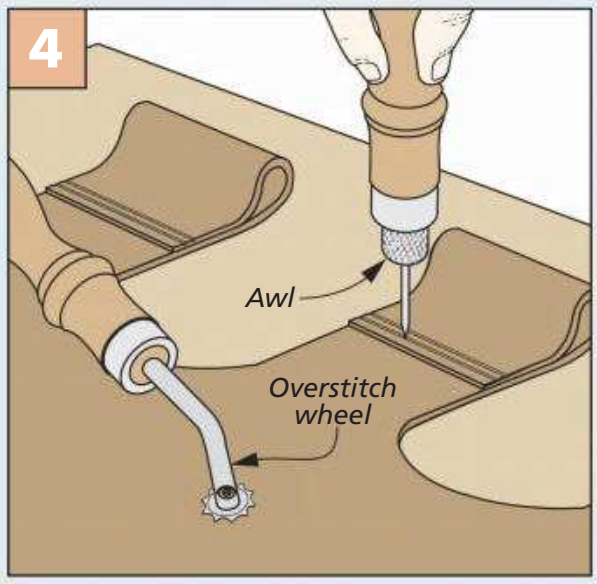

Even Spacing. Mark the stitch points using an overstitch wheel. Then, use a sharp awl to pierce the leather.

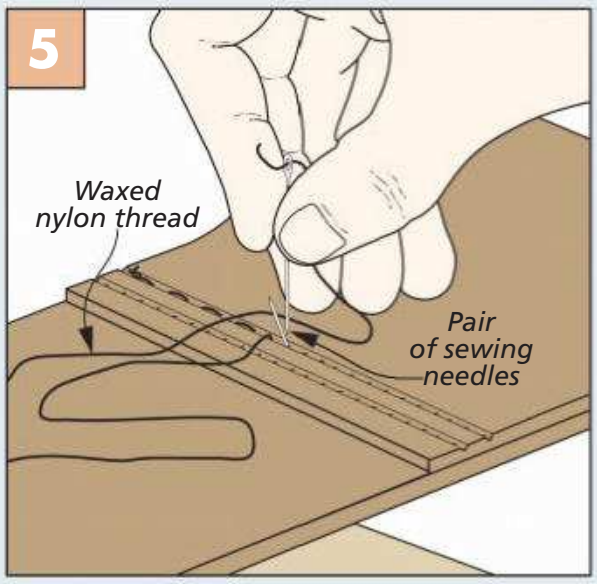

Saddle Stitch. Stitch the loops using a saddle stitch. A video of stitching is available at *Woodsmith.com*.

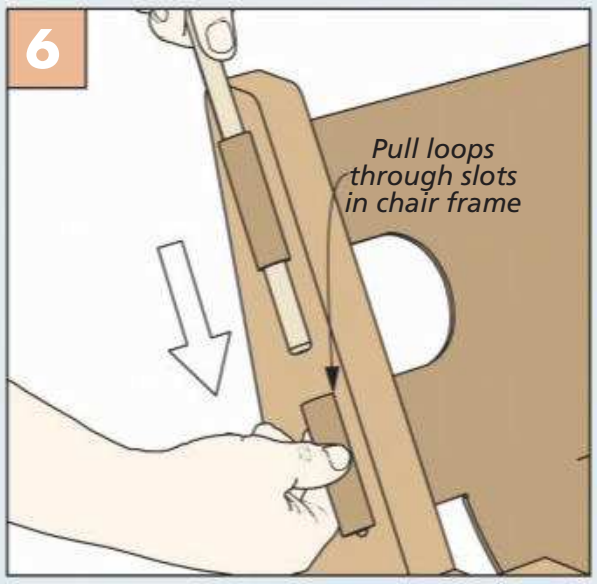

Install Seat. Pull the leather loops through the chair frame. Insert the dowels through the loops.

Materials, Supplies & Cutting Diagram

A	Rear Legs (2)	1¼ x 7 13/16 - 30
B	Front Legs (2)	1¼ x 5 - 21⅜
C	Seat Rails (2)	1¼ x 5½ - 15⅞
D	Stretchers (2)	1¼ x 4 - 25
E	Armrests (2)	1 x 4 x 18

- (2) ½"-dia. x 36" Dowels
- (6) #8 x 1½" Fh Woodscrews
- (12) ½"-dia. x 2" Fluted Dowels
- (2) 30¾" x 30¾" Hair-on Hide
- (1) Spool Waxed Nylon Thread

Woodsmith GO ONLINE EXTRAS For full-size patterns and a stitching video, go to Woodsmith.com

1½" x 4½" - 72" Red Oak (Two Boards @ 4.5 Bd. Ft. each)

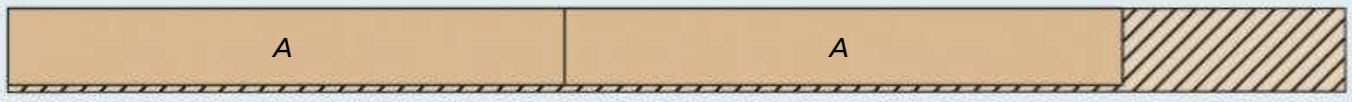

1½" x 6" - 84" Red Oak (Two Boards @ 7.0 Bd. Ft. each)

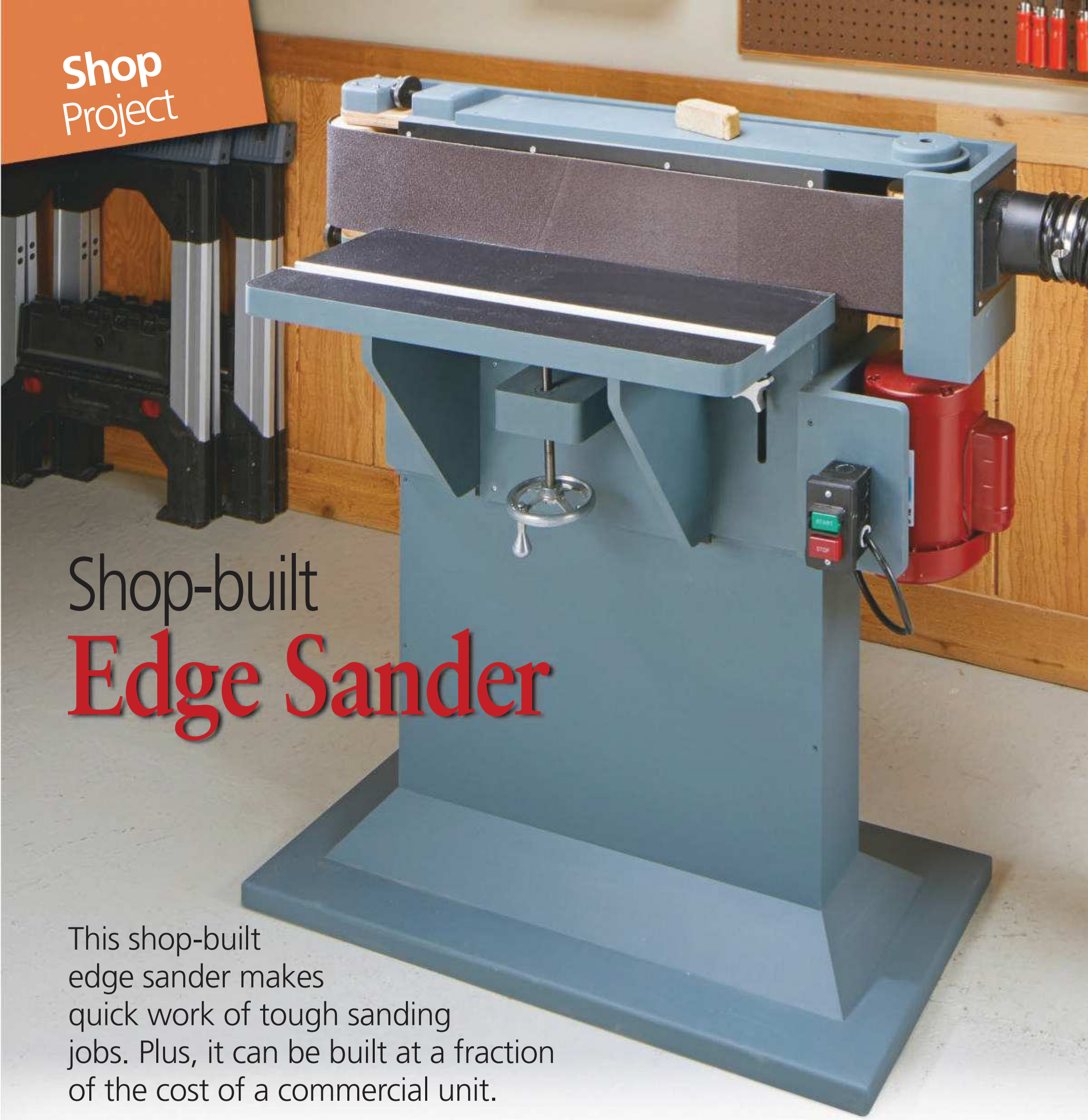

Shop-built Edge Sander

This shop-built edge sander makes quick work of tough sanding jobs. Plus, it can be built at a fraction of the cost of a commercial unit.

Any tool that can help take the drudgery out of sanding is a welcome addition to most shops. A large edge sander is a perfect example. But many of us don't have the funds for an expensive, dedicated stationary tool like this. So when our design team proposed this shop-made version built from common materials and hardware, I knew we'd hit the jackpot for both practicality and affordability.

PACKED WITH FEATURES. Just because this edge sander is "shop-built," doesn't mean that it skimps on features. From its precision tracking system to its fully adjustable sanding table, this sander has everything you'll need to get perfect results.

In addition, the 1-hp motor is up to any task thrown at it. And a convenient dust hook-up for your shop vacuum or dust collection system means clean up is virtually nonexistent.

So go ahead and read on to see how you can add this tool to your shop. Instead of feeling dread, you'll be excited the next time a sanding job comes up.

Written by: Robert Kemp; Project Design: Chris Fitch

Construction Overview / OVERALL DIMENSIONS: 44⅛"W x 45⁹⁄₁₆"H x 20¾"D

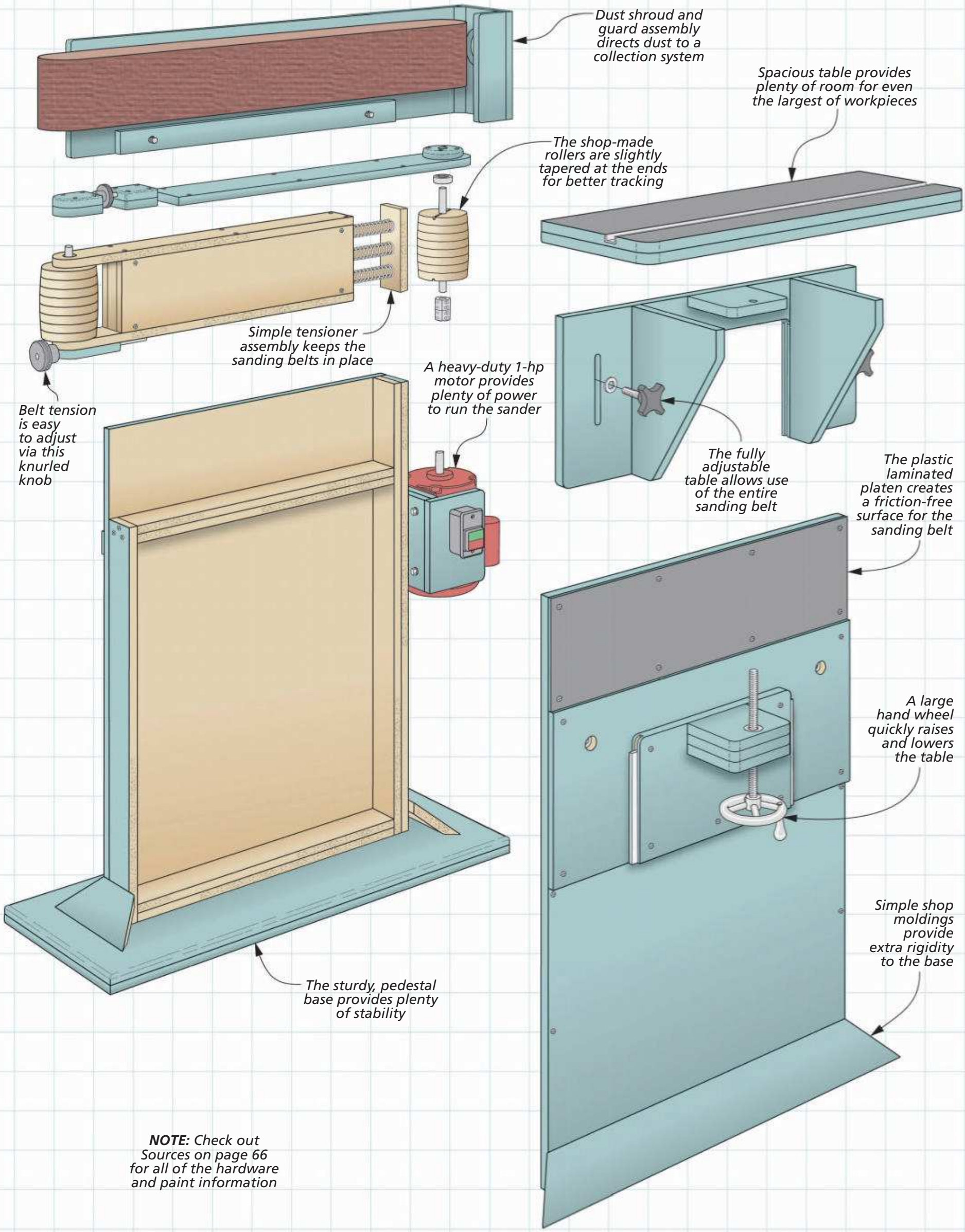

NOTE: *Check out Sources on page 66 for all of the hardware and paint information*

Illustrations: Peter J. Larson

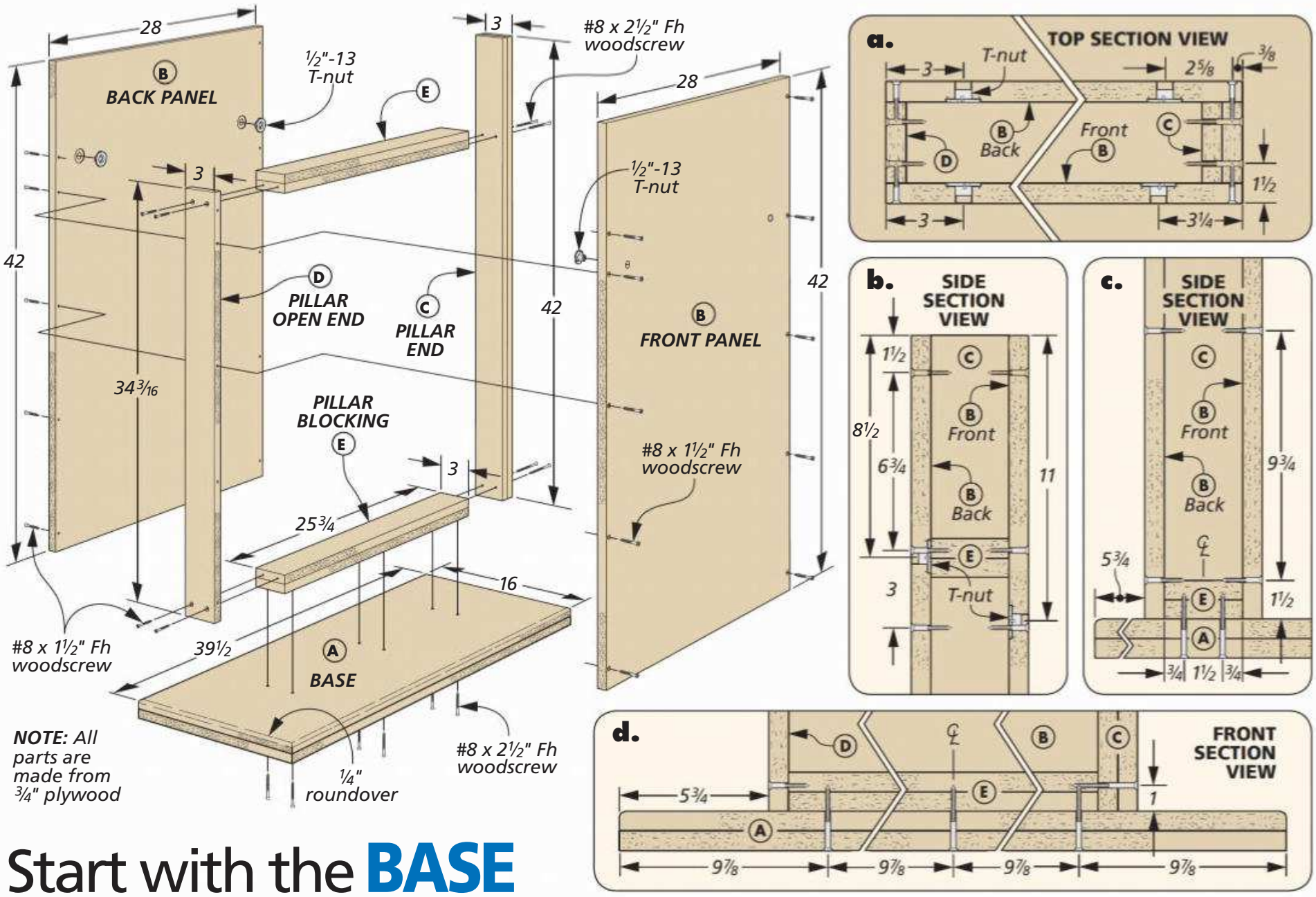

Start with the **BASE**

A tool as large as an edge sander requires a sturdy base. This sander is designed with a pedestal base that provides that solid foundation.

The majority of the parts for this sander are made from birch plywood, as shown above. And where possible, it's assembled using simple butt joints held together with glue and screws. A molding treatment around the bottom of the base adds more rigidity, as well as a decorative touch.

PART SIZING. I began by cutting out the parts for the base, the pillar end and the blocking. Since these are all made from two layers of plywood, I cut them slightly oversized and then glued them together. They can then be cut to final

How-To: MAKE THE BASE & CUT THE MOLDING

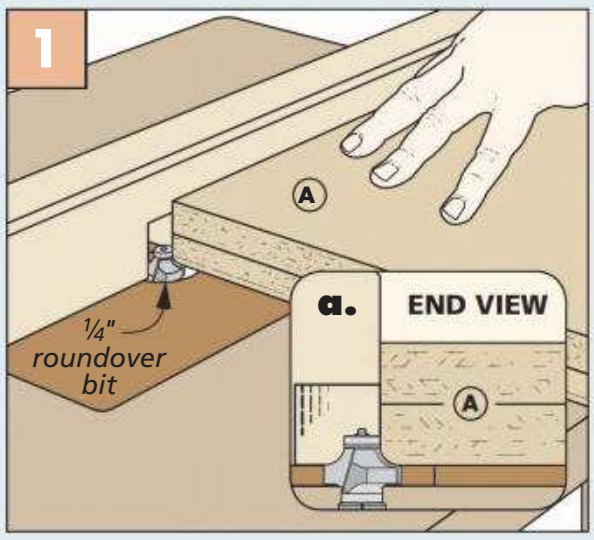

Round Over Base. After cutting the base to size, head to the router table to round over the upper edge.

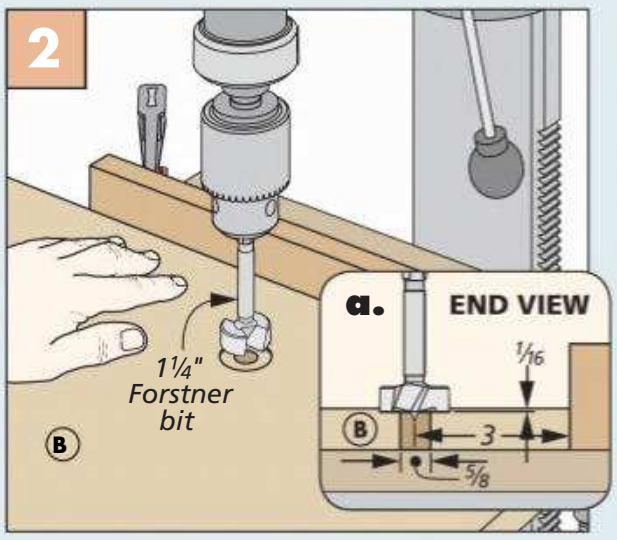

Holes for T-Nuts. Drill counterbored holes on the inside face of the front and back panel for a pair of T-nuts.

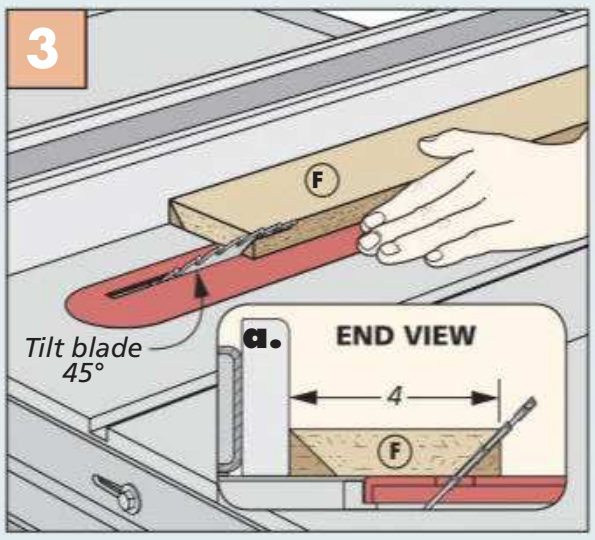

Bevel Molding Blanks. Use the table saw to bevel both long edges on all of the blanks for the base molding.

size after the glue cures. The panels can simply be cut to final size.

BASE DETAILS. You'll need to complete a few more steps before assembling any of the base parts. As you can see in Figure 1 on the previous page, the first of those steps is to round over the upper edge of the base. Next, I drilled the countersunk mounting holes in the base. Details 'c' and 'd' show where these go.

The front and back panels also need a little attention. Here, a couple of T-nuts are installed in the back face of each workpiece. These are used for mounting the sanding table and back guard later on. Details 'a,' 'b,' and Figure 2 provide the dimensions for these holes. You can then install the T-nuts and assemble the entire base.

BASE MOLDINGS

As I mentioned previously, a few pieces of molding are wrapped around the bottom edge of the pillar. In addition to being decorative, they also help to "lock" the pillar assembly to the plywood base. The molding pieces have beveled edges and a miter cut at either end for a nice, clean look.

OVERSIZE BLANKS. The first part of the process to make the molding is to cut the four pieces to final width, but leave them a little long for now. Then head to the table saw to bevel the long edges on each workpiece, as shown in Figure 3 on the previous page.

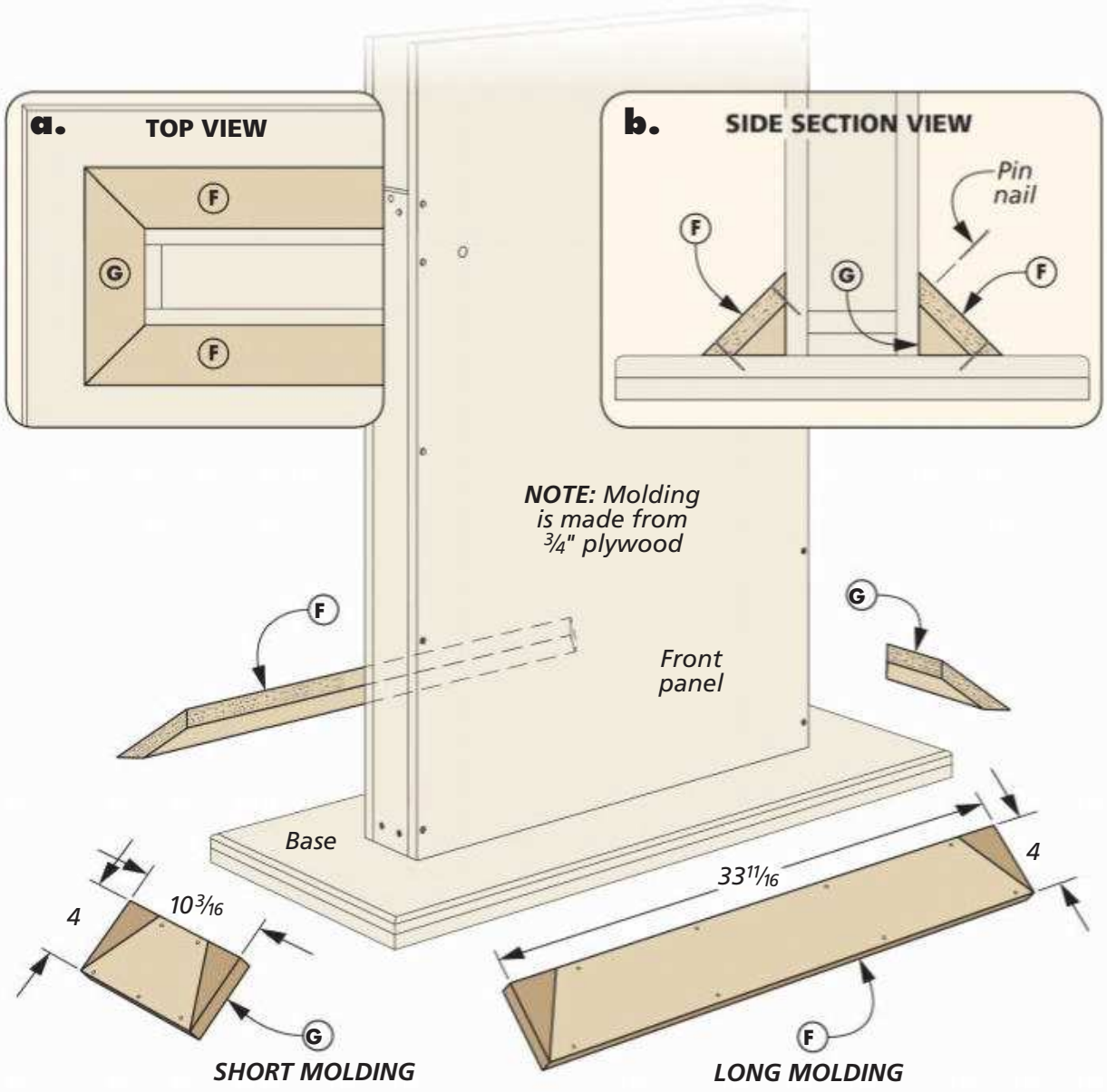

Beveling the long edges takes care of the final width of each piece. But in order to seamlessly wrap the pillar, the miter cuts on the ends need to be spot on. To get clean, accurate cuts, I made a simple jig that attaches to the table saw miter gauge (Figure 4, below). This holds each piece safely and securely at the proper angle for making these compound miter cuts.

Carefully mark the workpieces and make the miter cut on one end of each piece, as shown in Figure 5. You can then hold each piece in place against the base and pillar to mark for the second cut (Figure 6). Take your time to sneak up on the layout line to get a snug fit.

When completed, the moldings are held in place with glue and pin nails. Be sure to glue the miter joints, as well.

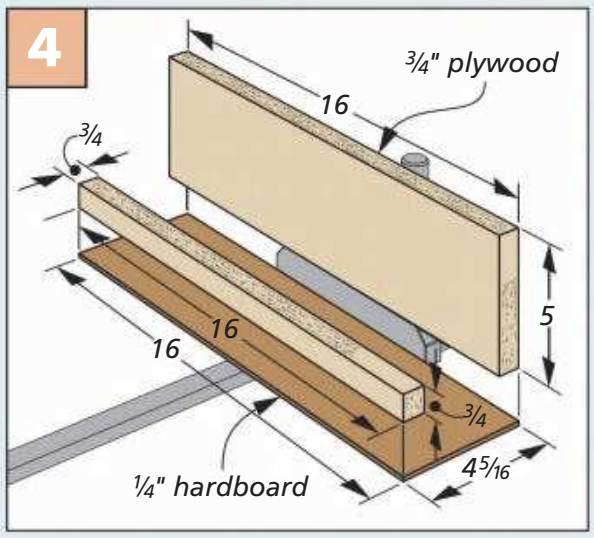

Molding Jig. This simple jig holds the molding blanks at the proper angle for cutting the miters on the ends.

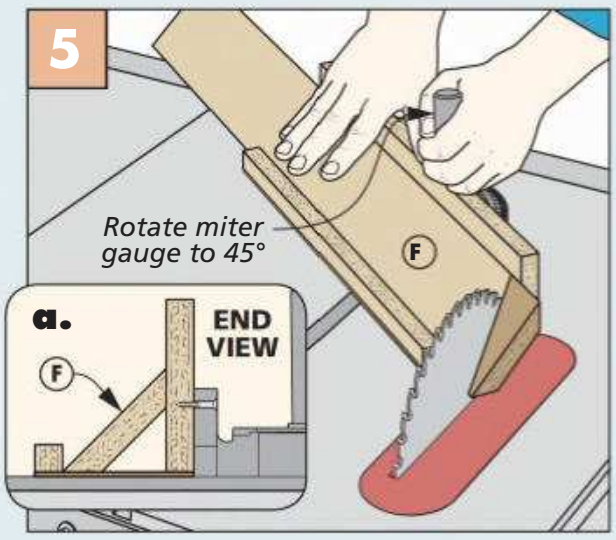

Miter One End. Position one molding blank in the jig, rotate the miter gauge 45°, and cut one end.

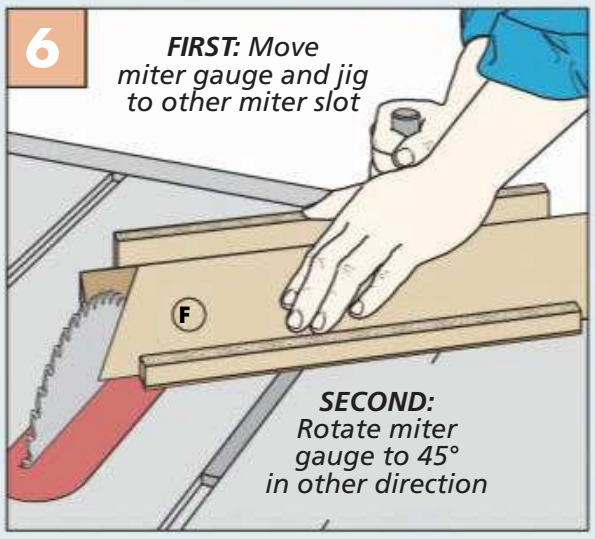

Cut Other End. After repositioning the miter gauge and marking the opposite end of the molding, make the cut.

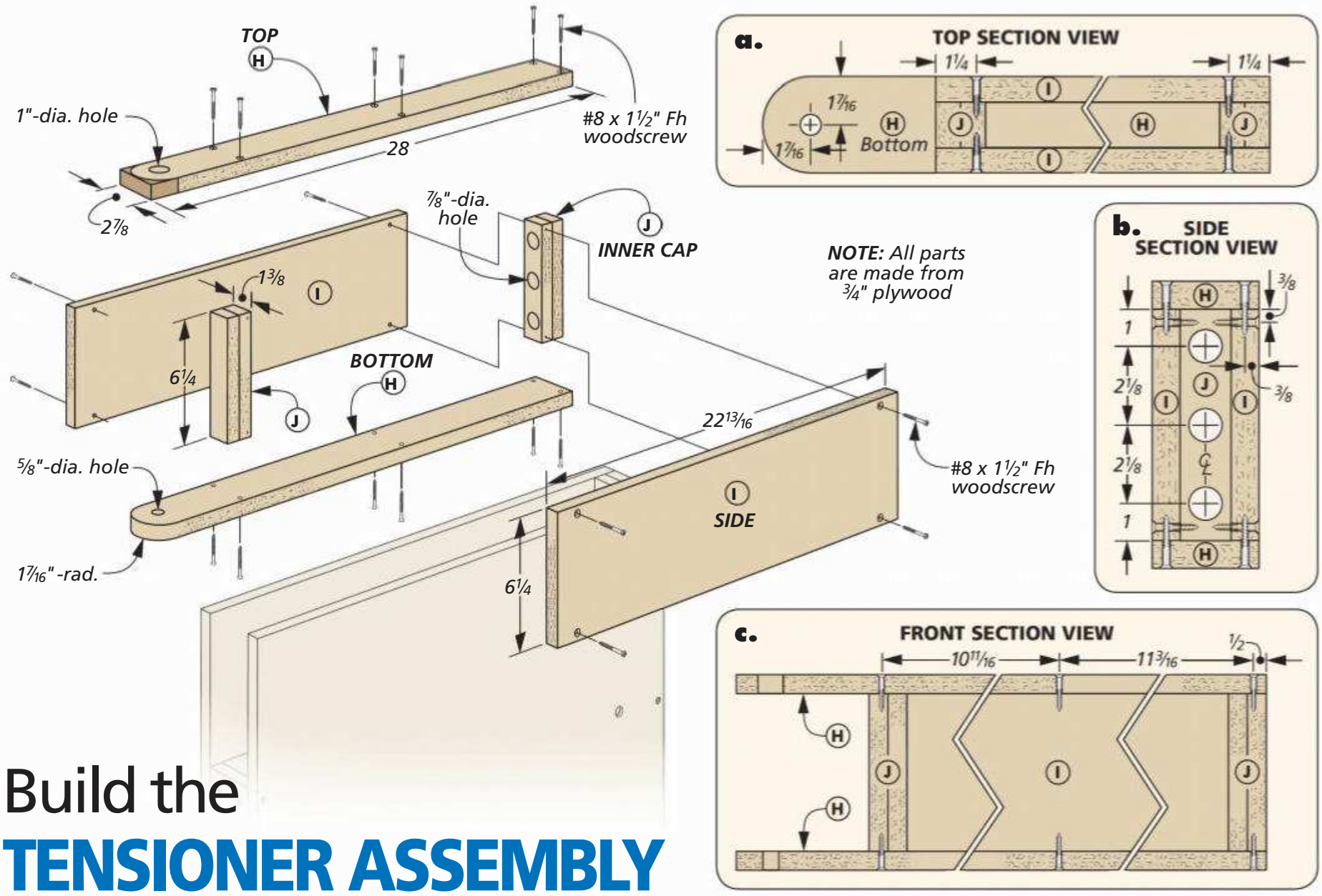

Build the TENSIONER ASSEMBLY

With the base out of the way, it's time to add the tensioner assembly box. This assembly is nothing more than a plywood box that fits inside the upper portion of the base. Its purpose is to tension the sanding belt through the use of three heavy-duty springs inside the tensioner assembly.

FABRICATE PARTS. Start the construction by cutting the parts shown above to size. The inner caps are both made from two layers of plywood. One of these caps has three evenly spaced holes for the spring guides to pass through. Make these holes at the drill press after cutting the cap to size.

The top and bottom both have a hole near one end for an idler shaft to pass through (Figure 1, below). Be sure to note that the holes are different sizes. Then, head to the band saw to round the ends of these two parts, as shown in Figure 2. Use glue and screws to assemble the tensioner assembly box.

How-To: MAKE & INSTALL THE TENSIONER ASSEMBLY

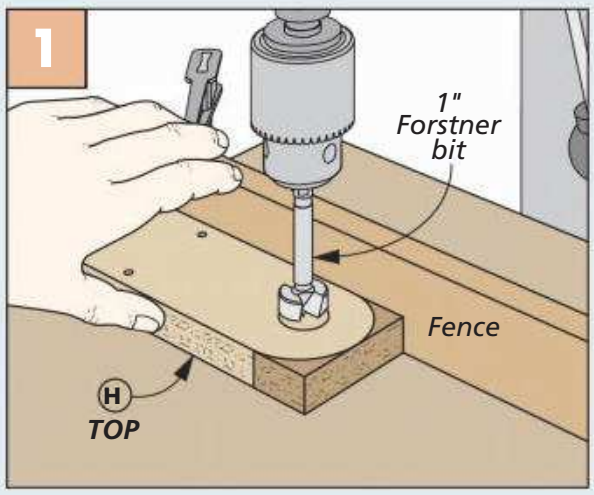

Drill Holes. The top and bottom have holes near one end. Note that the holes are different sizes.

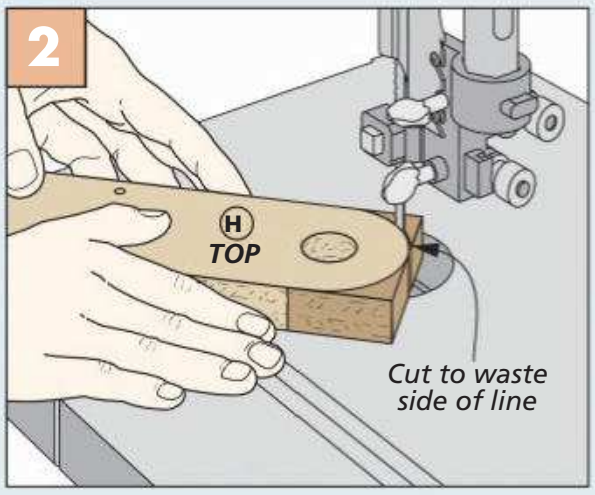

Cut Radius. After drilling the holes, head to the band saw to round the corners on the top and bottom.

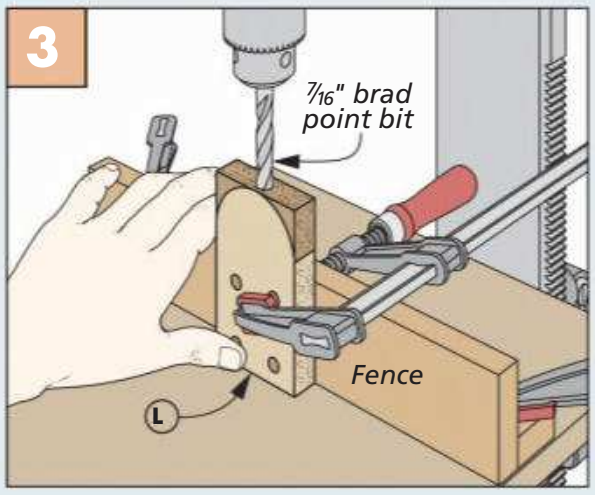

Long Through Hole. Clamp the tension cap to an auxiliary fence to drill the long through hole.

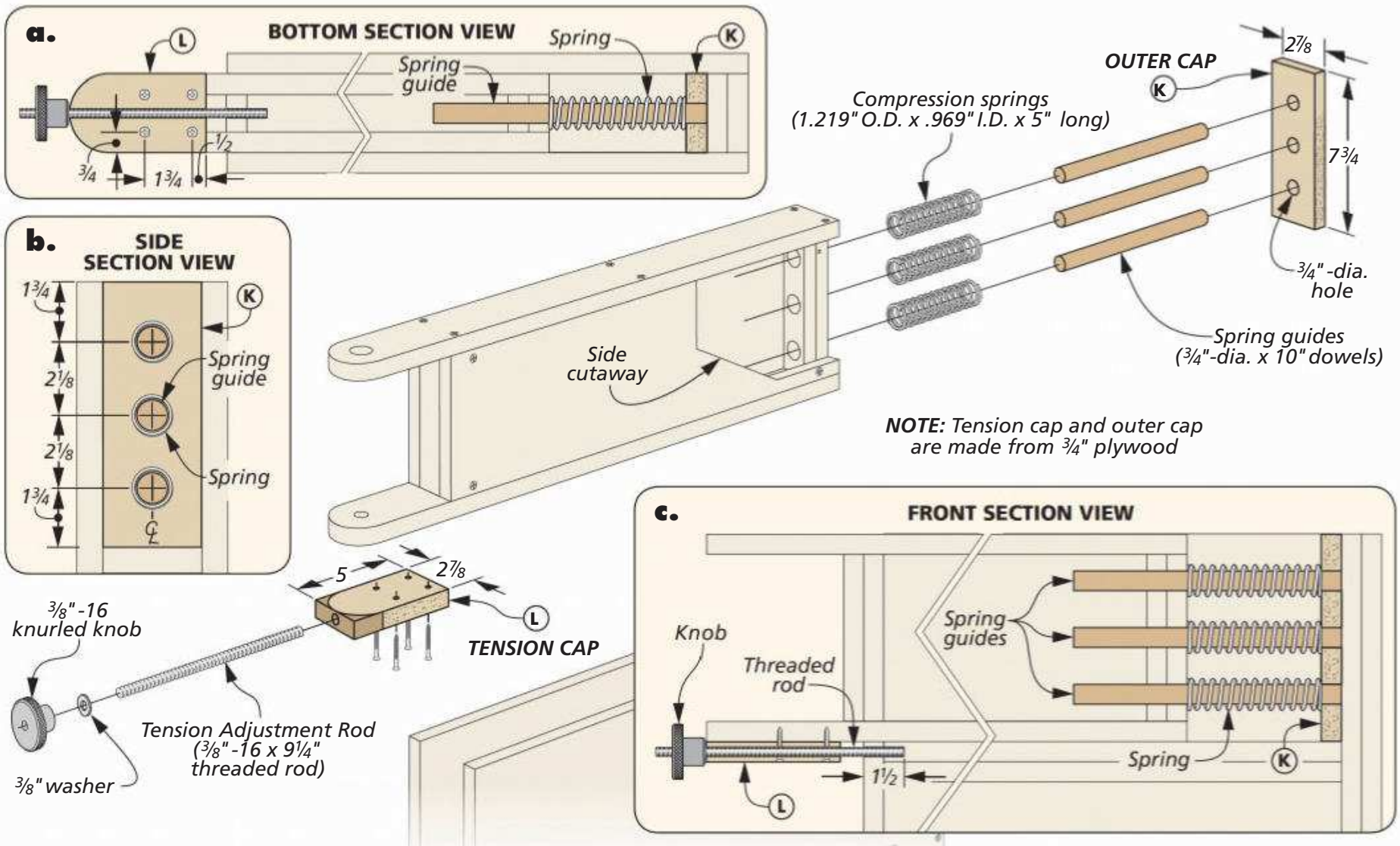

TENSIONER COMPONENTS

Next, you'll add a couple more pieces to the assembly, as well as a few pieces of hardware (shown above) that allow the tensioner to work properly. When completed, the whole unit slips into place at the top of the base.

SPRING ASSEMBLY. Begin by cutting the workpiece to size for the outer cap. After drilling the three holes, cut sections of hardwood dowel to act as spring guides. These dowels are simply glued in place in the outer cap. Slip the springs on the guides and set this assembly aside for now.

TENSION CAP. The tension cap has the same rounded profile as the top and bottom pieces of the tensioner box. But before cutting this profile at the band saw, make a stop at the drill press to drill the long through hole shown in Figure 3 on the previous page. This hole is for the tension adjustment rod. Now, drill the mounting holes and secure the tension cap to the bottom of the box, as shown above.

Finally, slip the entire tensioner assembly into the base and transfer the hole location from the tension cap to the pillar (Figure 4). After drilling this hole, use epoxy to secure the adjustment rod in the pillar before adding the washer and knob, as shown in Figure 5.

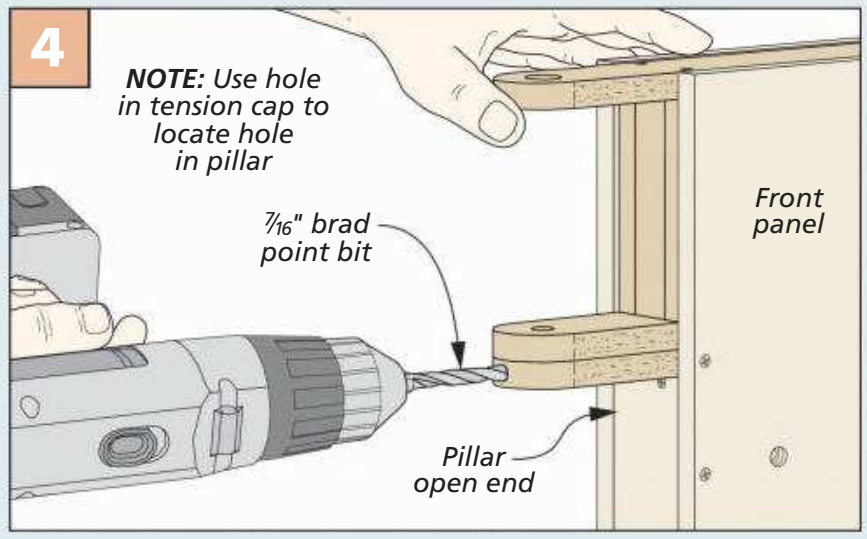

Extend Hole. With the spring assembly removed from the tensioner, position the tensioner in the base and transfer the hole through the cap into the pillar and blocking.

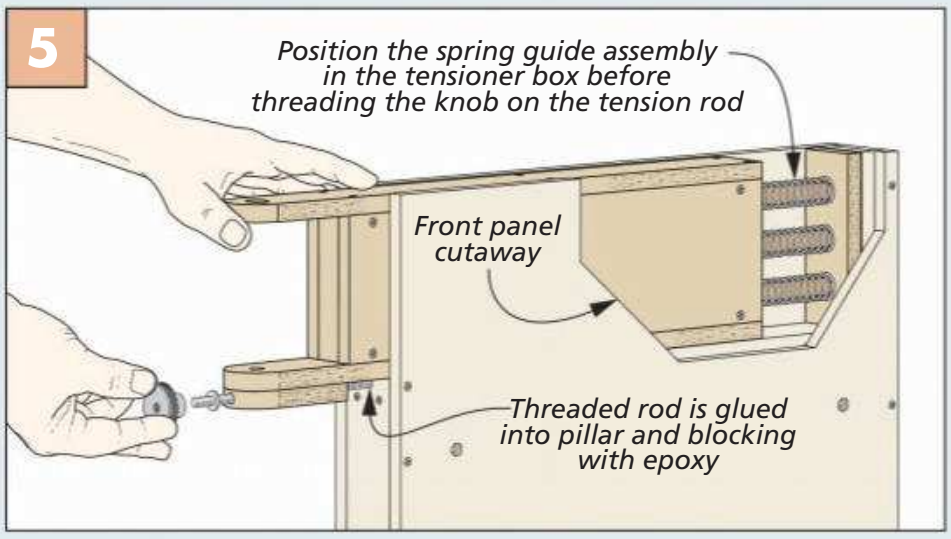

Install Assembly. After securing the threaded rod into the hole in the pillar and blocking with epoxy, place the tensioner box back in position and hold it in place with a washer and knob.

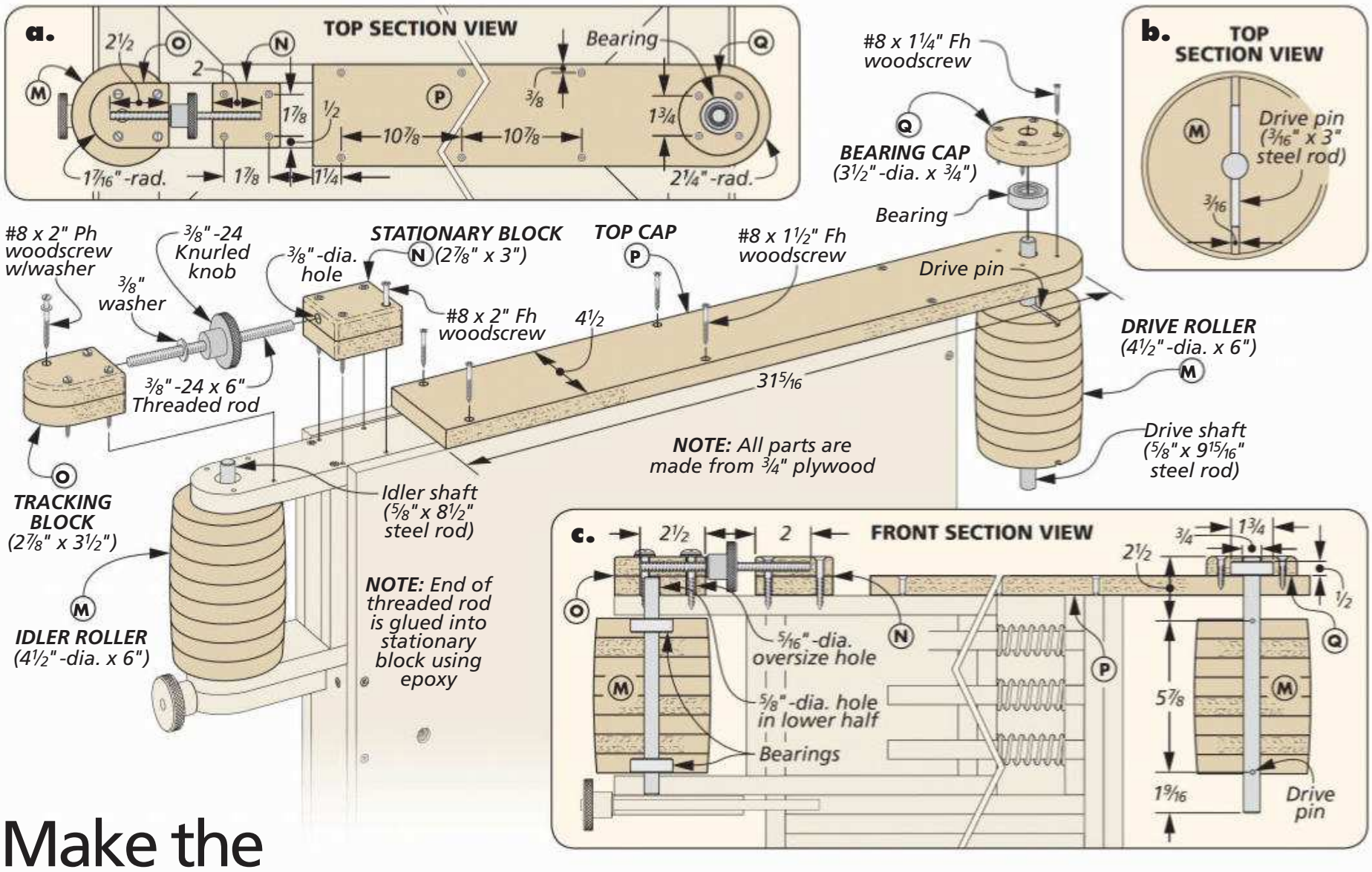

Make the ROLLERS & MOTOR MOUNT

Just like a belt sander, this edge sander has two rollers that guide the sanding belt — a drive roller and an idler roller. These rollers consist of a stack of plywood discs that start out as square blanks. A few other pieces of hardware are added that allow you to adjust the tracking of the sanding belt. From there, you'll move on to giving the edge sander life by adding the motor mount and switch.

ROLLER BLANKS. Begin by cutting enough blanks to size for the rollers. I used eight for each roller. If your plywood isn't a true 3/4", you may need to add another layer in the middle to end up with rollers that are the proper length.

Before gluing the blanks together, use the information in details 'b' and 'c' above to prepare the blanks. This includes drilling the through holes in the center of each one, as well as making the counterbores in the two outer idler blanks to house the bearings (Figure 1, below). The two outer blanks on

How-To: CREATE THE DRIVE & IDLER ROLLERS

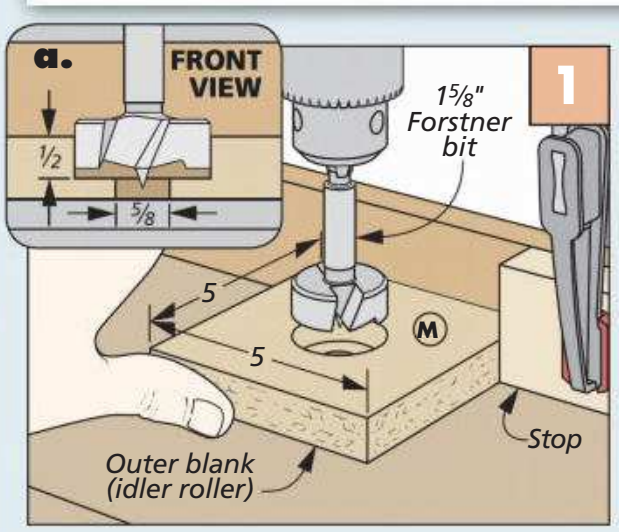

Drilling Blanks. Counterbore the outer blanks of the idler roller. Then, drill the through holes in the rest of the blanks.

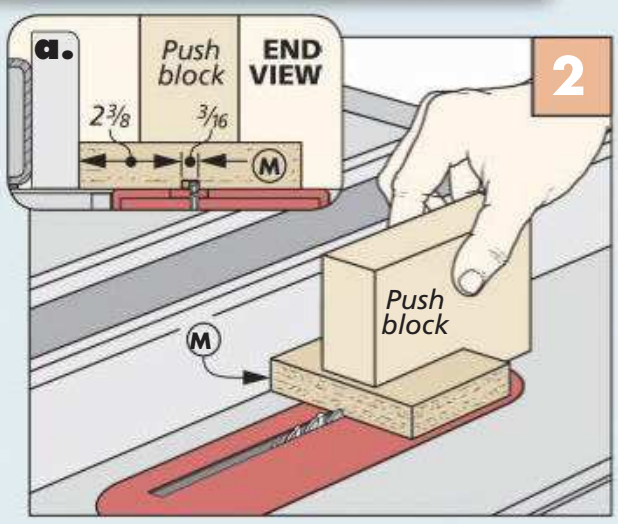

Shallow Grooves. Create a shallow groove in the face of the outer blanks of the drive roller at the table saw.

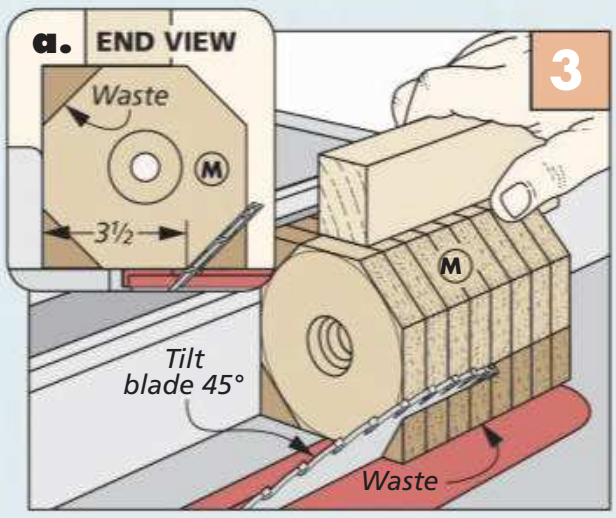

Removing Waste. Remove the bulk of the waste at the table saw by knocking off the corners of the glued-up blank.

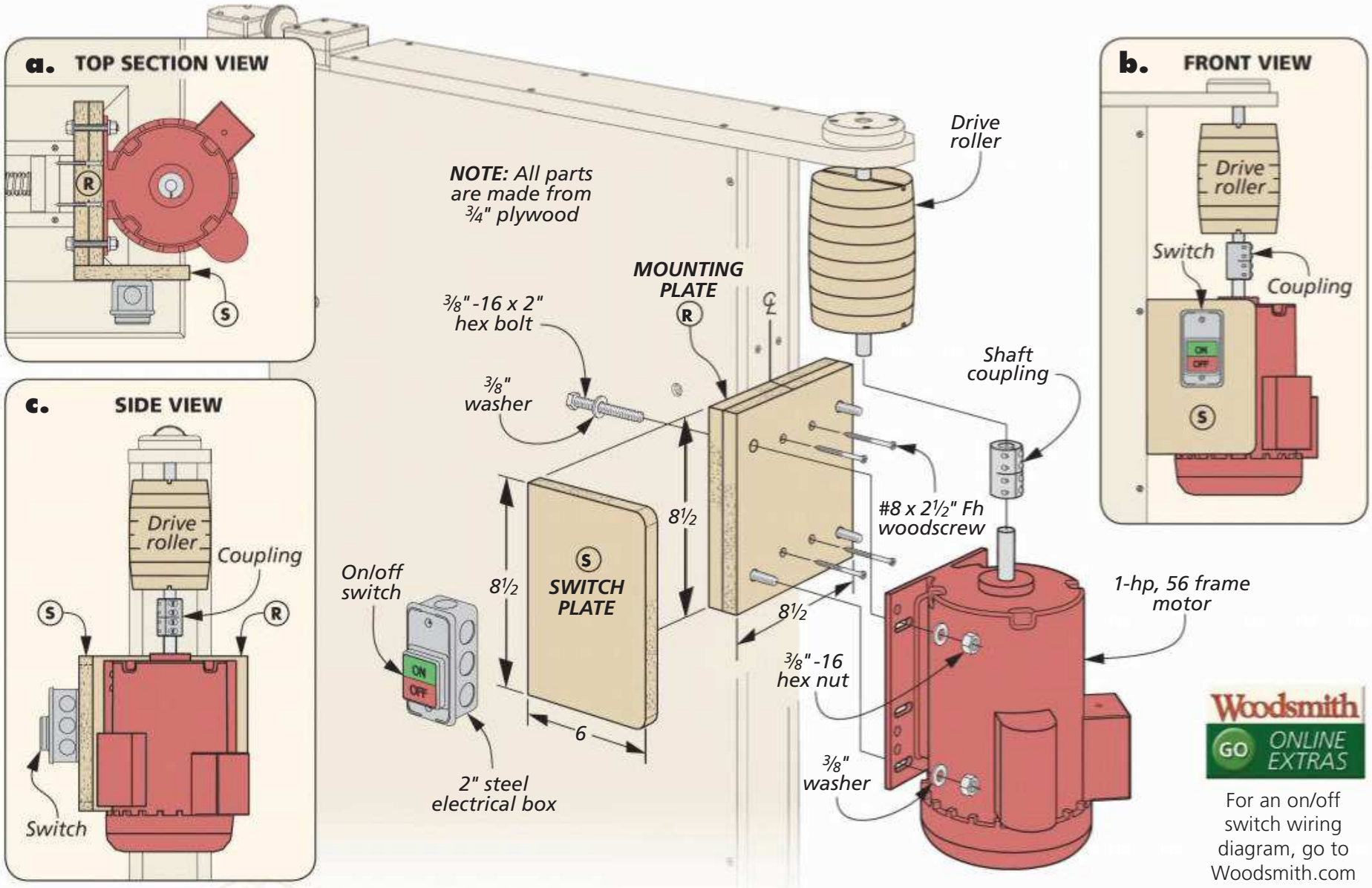

Woodsmith GO ONLINE EXTRAS

For an on/off switch wiring diagram, go to Woodsmith.com

the drive roller have a groove across the face to allow a drive pin to be inserted through a metal shaft. This is shown in Figure 2 on the previous page.

Now, glue the roller blanks together. To turn these square blocks into round rollers, I first headed to the table saw to clip the corners on each one (Figure 3). To remove the rest of the waste, I used a clever jig at the router table (Figure 4, below). To find out how to build and use this simple jig, check out Shop Notes on page 64.

Next, make the remaining parts shown on the previous page, including the stationary and tracking blocks and the top and bearing caps. The process for making the bearing cap is shown in Figure 5. You'll also need to cut the roller shafts to length from a piece of steel rod and assemble the parts for the tracking mechanism.

Drill two holes in the drive shaft for locking the shaft to the roller with drive pins (detail 'b' & 'c', previous page). I used epoxy to hold them in place. Epoxy is also the perfect choice for installing the bearings in the idler roller. Use the illustrations on the previous page to locate and attach the blocks, caps, and tracking hardware.

MAKE THE MOTOR MOUNTS

A word of caution about mounting the motor to the base — if you get a motor similar to the one we used (see Sources on page 66), it's very heavy. You'll most likely need to recruit a helper to install it or devise a way to prop it up while marking the mounting block location.

Start by coupling the motor shaft to the drive roller shaft and lift the entire assembly until it's fully seated in the bearing cap (detail 'c', above). Have a helper slip the mounting plate behind the motor and mark the mounting holes. Now it's just a matter of attaching the mounting plate to the base and reinstalling the motor on the bolts. Check out the online extra for help wiring the switch to the motor.

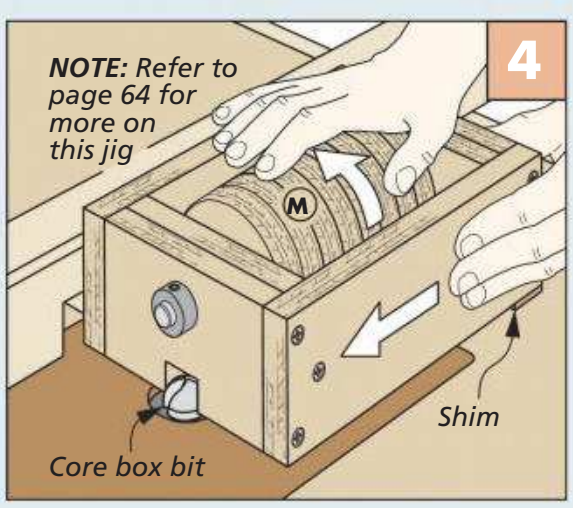

Final Rounding. Use the jig at the router table to "turn" the roller, then taper each end to create a crown.

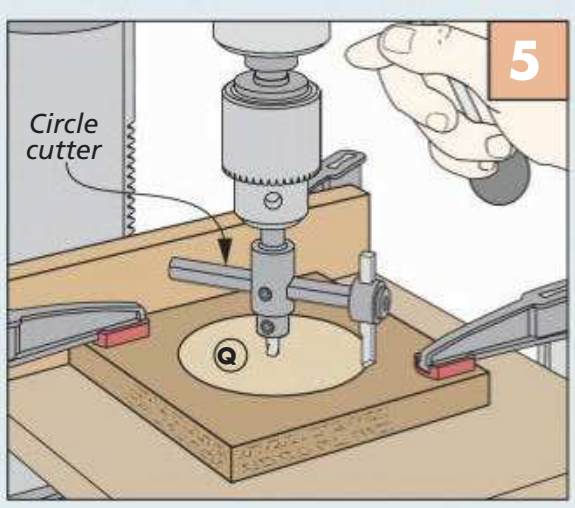

Bearing Cap. A circle cutter in the drill press is a quick way to cut the bearing cap to size.

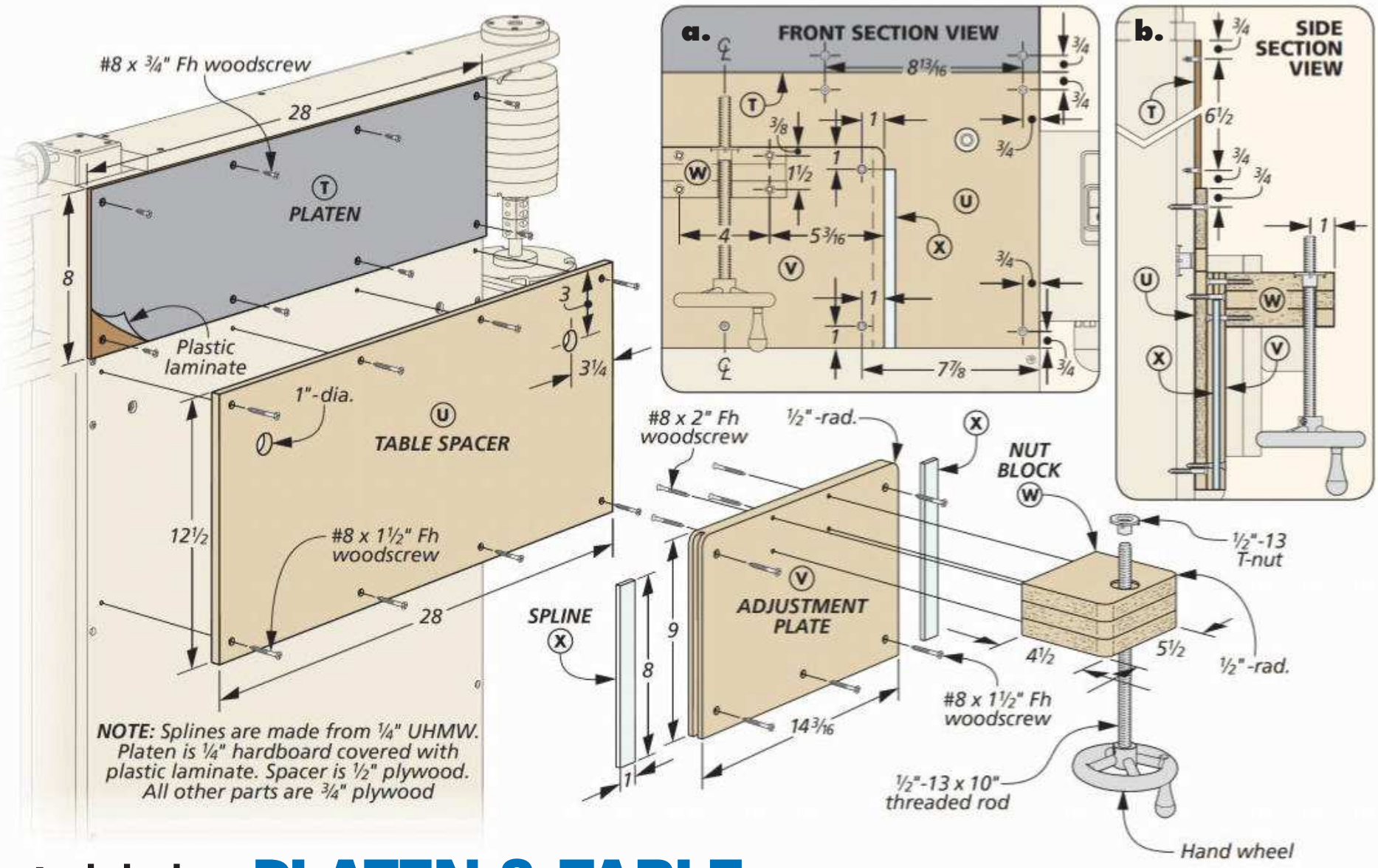

Add the PLATEN & TABLE

An edge sander requires a smooth surface for the sanding belt to ride against, as well as a sturdy, adjustable table to support a workpiece and allow for full use of the sanding belt. To that end, I came up with a clever but simple solution that makes use of some shop-made hardware for lowering and raising the table.

PLATEN & SPACER. The platen is made from a piece of hardboard covered with plastic laminate. Cut it to size and attach it to the front panel, as shown above. The table spacer provides clearance between the table and the sanding belt. It's butted against the lower edge of the platen and held in place with glue and screws. Be sure to drill the two holes in the spacer to allow access to the T-nuts in the front panel.

ADJUSTMENT ASSEMBLY. The first part of the table adjustment assembly is a simple adjustment plate. It has two UHMW splines in its outside edges that act as runners. These allow the table to ride up and down smoothly.

Cut the adjustment plate to size, first. Then, use a slot-cutting bit to create the grooves along the edges, as shown in Figure 1 at left. The splines are cut to size from a sheet of UHMW and glued in the grooves. I used epoxy to hold the pieces in place.

The nut block is next. It holds a large hand wheel that moves the table up and down. A large T-nut in the top of the nut block secures the threaded rod. Position the T-nut as shown in Figure 2.

The nut block is held to the adjustment plate using glue and screws. From there, you can attach the adjustment plate to the table spacer. Details 'a' and 'b' above show the plate positioned flush with the bottom edge of the spacer.

How-To: MAKE THE ADJUSTMENT MECHANISM

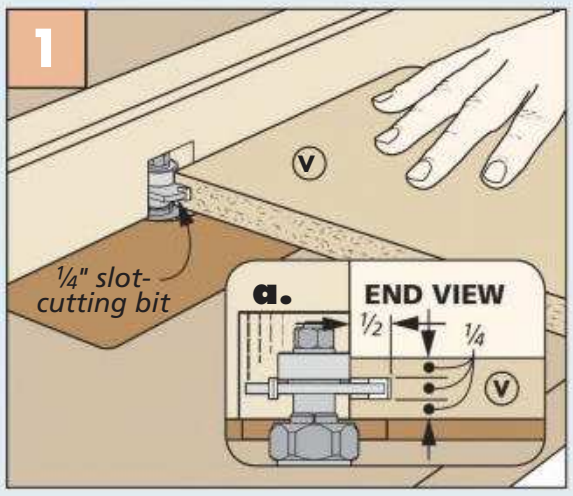

Rout the Grooves. Use a slot-cutting router bit to make the grooves along the edges of the adjustment plate.

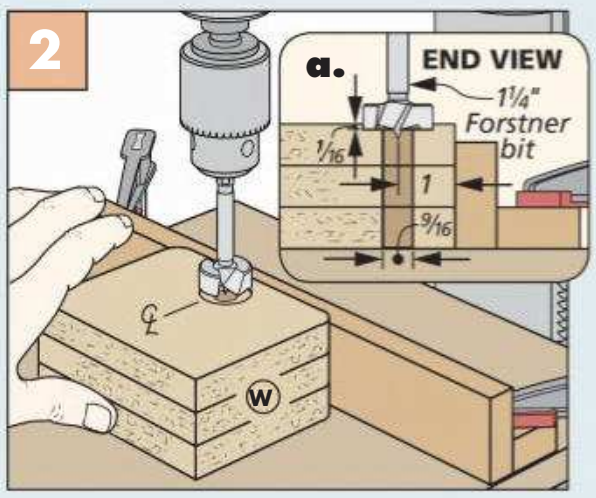

Drill Block. Drill counterbored holes on either face of the nut block, then complete the through hole.

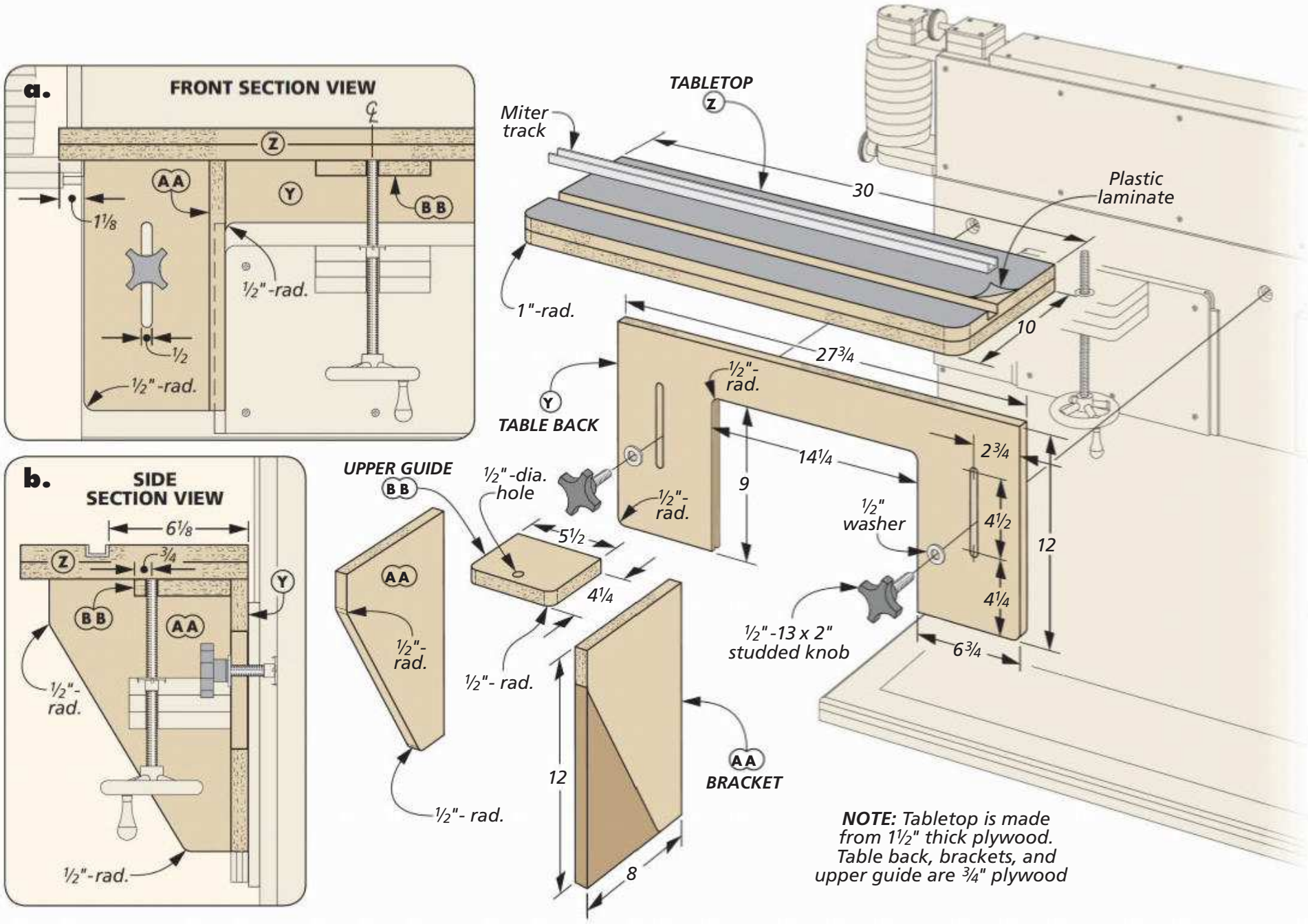

RUGGED TABLE

The rest of the table parts go together pretty quickly. I began by making the tabletop from two layers of plywood and cutting it to size. After adding a piece of the same laminate I used on the platen, I created a groove in the top for a miter track at the table saw (Figure 1).

The table back fits around the adjustment plate. It has two slots for the knob studs to pass through into the T-nuts in the front panel. Figure 2 shows the process for creating these slots. Then, you'll need two grooves along the inner edges for the splines to ride in. I made these with a slot-cutting bit at the router table.

BRING IT TOGETHER. All that's left is to cut the two brackets to size and make the upper guide. I attached the brackets to the back with glue and screws. The entire assembly (plus the upper guide) is then glued to the bottom of the tabletop. Slip the table back grooves over the splines and lower it in place.

How-To: COMPLETE THE TABLETOP & SUPPORTS

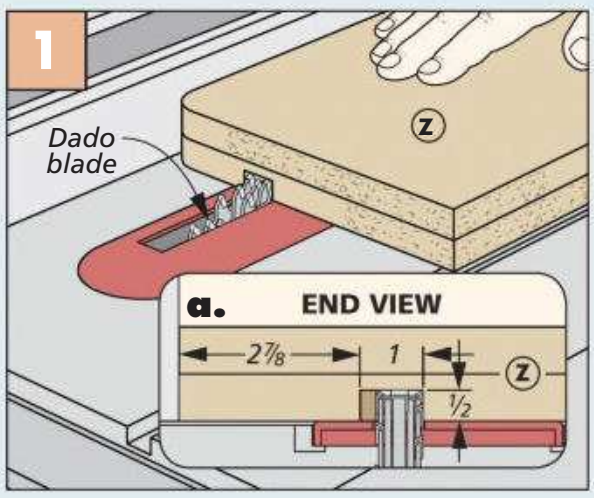

Groove for T-Track. Make a couple of passes with a dado blade to size the groove for the tabletop T-track.

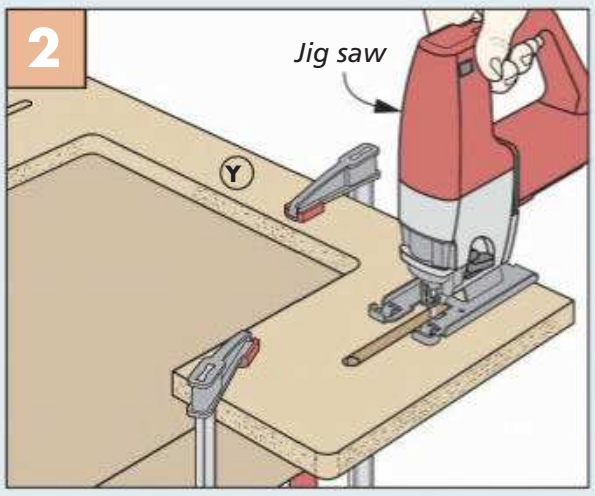

Slots in Back. After defining the ends of the slots by drilling holes, remove the rest of the waste with a jig saw.

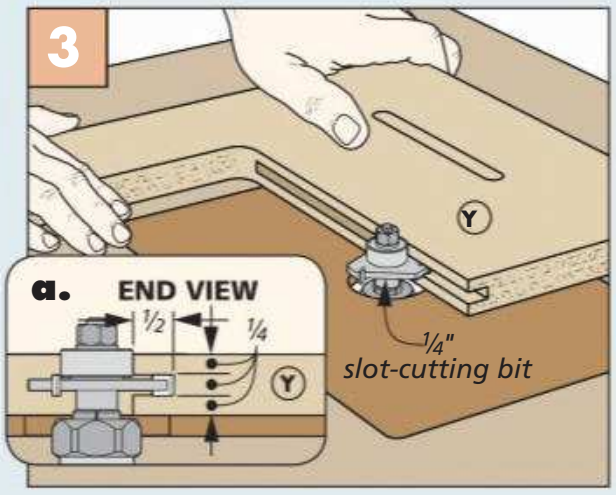

Matching Grooves. Head back to the router table to create the grooves on the inside edges of the back.

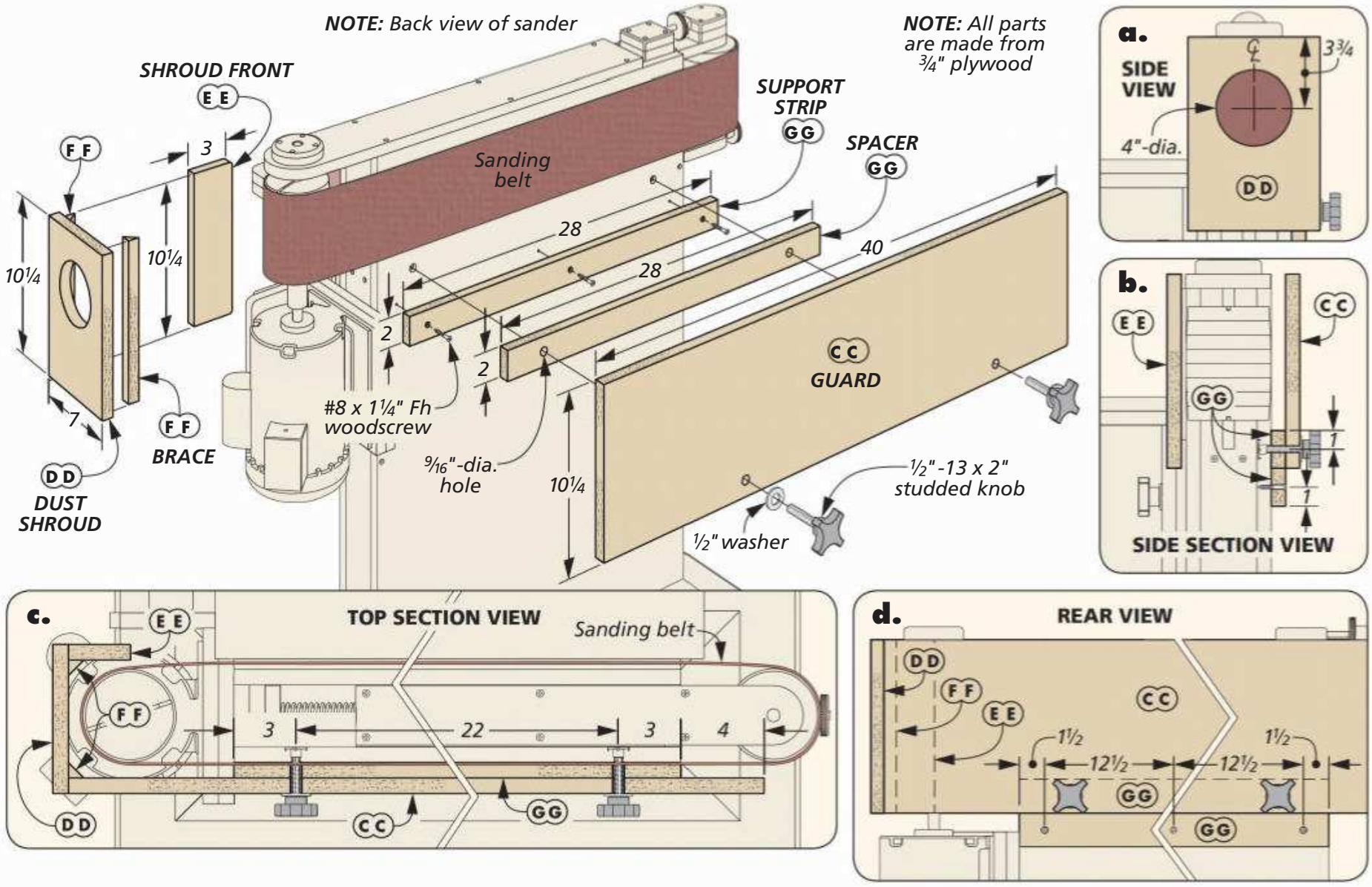

Controlling the DUST

With the adjustable table completed and installed, all that's left is a little more woodworking to finish up this project. Now, as you might guess, a tool like an edge sander creates a large amount of dust. In order to keep all of that unhealthy dust out of your lungs, you'll want to add the dust collection shroud and guards shown above. This allows you to hook up the sander to your dust collection system or shop vacuum. The guard pulls double-duty by helping to contain and direct the dust while also adding a safety feature by covering the rear portion of the sanding belt. The whole assembly is easy to install using the two knobs on the back of the sander.

BASIC CONSTRUCTION. There's nothing complicated about any of these parts. I began by making the dust shroud that covers the end of the belt. The large hole is sized to accommodate a plastic dust collection shroud. A circle cutter set to the appropriate diameter works well for this (Figure 1).

Now, cut the rest of the parts to size, including the two braces that reinforce the butt joinery (Figure 2). Use glue and clamps to assemble the shroud, braces, and guard (detail 'c').

At this point, I glued a spacer to the bottom edge of the guard and secured the entire assembly in place with the two knobs. A support strip is butted against the underside of the spacer (detail 'b') and attached to the back panel with screws.

How-To: MAKE THE DUST COLLECTION PARTS

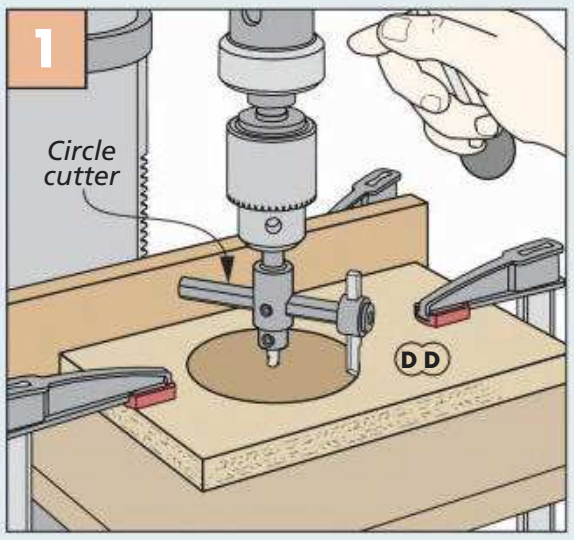

Dust Shroud Hole. Use a circle cutter to make the opening in the dust shroud to match your dust hose.

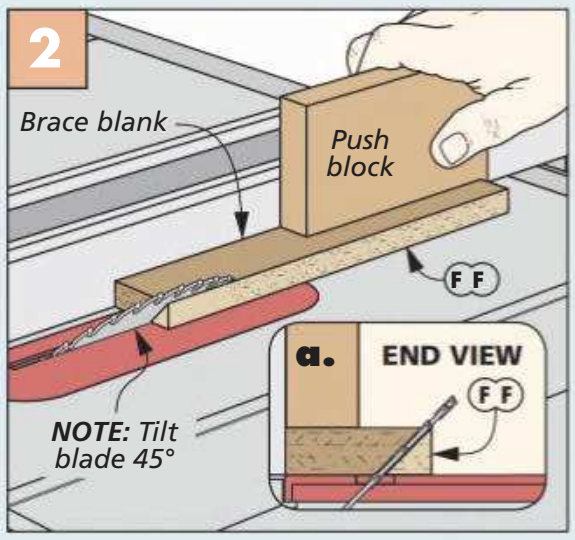

Shroud Braces. To make the two braces, start with an oversize blank before cutting them free (detail 'a').

With a little slack in the tensioner, slip the belt in place and turn the knob counterclockwise until the belt is snug.

Loosen the pan head screws on top of the tracking cap and fine-tune the belt tracking by turning the knob on top.

With the knobs loosened, the hand wheel on the underside of the table quickly raises and lowers the table.

USING THE SANDER

One of the nicest features of this sander is how easy it is to set up and use. The photos above cover the main points you need to know.

INSTALLING THE BELT. To position a belt on the sander, turn the tension knob clockwise to move the tensioner assembly inward. Then, slip the belt in place over the two rollers and tighten the knob (counterclockwise) until the belt is snug (left photo).

ADJUST TRACKING. The knob at the top of the tracking assembly adjusts the belt tracking across the rollers (middle photo). You want the belt to run true without "wandering" up or down. After the initial setting, this shouldn't need further adjustment, other than the occasional tweak. And keep in mind that a small turn of this adjustment knob is all that's required to get the correct setting.

TABLE ADJUSTMENT. Raising and lowering the table is pretty self-explanatory. Simply loosen the two locking knobs and turn the handle to achieve the desired position (right photo).

Now, with this useful tool in your shop, you won't dread those big sanding tasks anymore. W

Materials & Supplies

A	Base (1)	1½ ply. - 16 x 39½
B	Front/Back Panels (2)	¾ ply. - 28 x 42
C	Pillar End (1)	1½ ply. - 3 x 42
D	Pillar Open End (1)	¾ ply. - 3 x 34 3/16
E	Pillar Blocking (2)	1½ ply. - 3 x 25¾
F	Long Moldings (2)	¾ ply. - 4 x 33 11/16
G	Short Moldings (2)	¾ ply. - 4 x 10 3/16
H	Top/Bottom (2)	¾ ply. - 2⅞ x 28
I	Sides (2)	¾ ply. - 6¼ x 22 13/16
J	Inner Caps (2)	1½ ply. - 1⅜ x 6¼
K	Outer Cap (1)	¾ ply. - 2⅞ x 7¾
L	Tension Cap (1)	¾ ply. - 2⅞ x 5
M	Drive/Idler Rllr. Blanks (16)	¾ ply. - 5 x 5
N	Stationary Block (1)	1½ ply. - 2⅞ x 3
O	Tracking Block (1)	1½ ply. - 2⅞ x 3½
P	Top Cap (1)	¾ ply. - 4½ x 31 5/16
Q	Bearing Cap Blank (1)	¾ ply. - 5 x 5
R	Mounting Plate (1)	1½ ply. - 8½ x 8½
S	Switch Plate (1)	¾ ply. - 6 x 8½
T	Platen (1)	¼ hdbd. - 8 x 28
U	Table Spacer (1)	½ ply. - 12½ x 28
V	Adjustment Plate (1)	¾ ply. - 9 x 14 3/16
W	Nut Block (1)	2¼ ply. x 4½ - 5½
X	Splines (2)	¼ UHMW x 1 - 8
Y	Table Back (1)	¾ ply. - 12 x 27¾
Z	Table Top (1)	1½ ply. - 10 x 30
AA	Brackets (2)	¾ ply. - 8 x 12
BB	Upper Guide (1)	¾ ply. - 4¼ x 5½
CC	Guard (1)	¾ ply. - 10¼ x 40
DD	Dust Shroud (1)	¾ ply. - 7 x 10¼
EE	Shroud Front (1)	¾ ply. - 3 x 10¼
FF	Braces (2)	¾ ply. - ¾ x 10¼
GG	Support Strip/Spacer (2)	¾ ply. - 2 x 28

- (5) ½"-13 T-Nuts
- (8) #8 x ¾" Fh Woodscrews
- (8) #8 x 1¼" Fh Woodscrews
- (54) #8 x 1½" Fh Woodscrews
- (12) #8 x 2" Fh Woodscrews
- (12) #8 x 2½" Fh Woodscrews
- (1) ¾"-dia. x 36" Dowel
- (1) ⅜"-16 x 12" Threaded Rod
- (1) ⅜"-24 x 12" Threaded Rod
- (3) Compression Springs
- (1) ⅜"-16 Knurled Knob
- (1) ⅜"-24 Knurled Knob
- (6) ⅜" Washers
- (1) ⅝"-dia. x 24" Steel Rod
- (4) #8 x 2" Ph Woodscrews w/Washers
- (1) 3/16"-dia. x 12" Steel Rod
- (3) 1¾"-dia. O.D. x ⅝"-dia. I.D. Bearings
- (1) 1-hp Motor
- (1) On/Off Switch
- (1) 2" Steel Electrical Box
- (1) Shaft Coupler
- (4) ⅜"-16 x 2" Hex Bolts
- (4) ⅜"-16 Nuts
- (1) 48" x 48" Plastic Laminate
- (1) ½"-13 x 12" Threaded Rod
- (1) 4½"-dia. Hand Wheel
- (1) 30"-long Miter Track
- (4) ½"-13 x 2" Studded Knobs
- (4) ½" Washers
- (1) 6" x 89" Sanding Belt

***ALSO NEEDED:** Two 48" x 96" sheets of ¾" birch plywood. One 48" x 48" sheet of ½" birch plywood. One 48" x 48" sheet of ¼" hardboard. One 12" x 12" piece of ¼" UHMW.*

Heirloom Project

Reviving a classic Eastlake Table

Sink your teeth into some late nineteenth-century woodworking with this creative, eye-catching heirloom project.

Charles Eastlake was a nineteenth century architect, furniture designer, and author. His work is the inspiration behind the table you're looking at here. The distinctive look came about between two better-known style periods — the Victorian and the Arts & Crafts movement. Its stylings are not as ornate and complex as the Victorian period. But, as you see in the photo above, the details are more energetic than the subtle profiles of Craftsman furniture.

MATERIAL DECISIONS. Early versions of this table were built using the plentiful supply of walnut that was available at the time. Later iterations were often done in oak. To throw some spice into the mix, we chose African mahogany.

As you can see in the images here, the marble top contrasts well with this choice of wood and is consistent with authentic Eastlake style. But the unique and appealing qualities of this table don't stop there.

ORGANIC WOODWORKING. At the core of this table is the center spindle. This trunk-like center has a lot going on. Beyond the mortises that hold the legs and stretchers that branch out from it, there are some decorative reeds that are scratched into the surface of the spindle, as well as the aprons and corner blocks. You'll create these reeds with a shop-made tool that has a history longer than the table itself. So strap on your apron and let's get going.

Written by; Erich Lage, Project Design: Dennis Volz

Construction Overview / OVERALL DIMENSIONS: 30"W x 29¼"H x 30"D

A marble top is a hallmark of the Eastlake style. If you prefer a wood top, page 55 has the details

Screws through the stretchers into the legs help stabilize the table

Simple hardwood cleats hold the top in place

Leg design reflects the spirit of Eastlake furniture

The reeding in the aprons, corner blocks, and center spindle creates visual harmony in the table

The corner blocks provide a strong junction between the aprons and stretchers

***NOTE:** A scratch stock is used to make the reeding. The article on page 56 shows you how to make and use the tool*

Legs are joined to table with mortise and tenon joinery

Center spindle and corner blocks are made from glued-up hardwood

***NOTE:** A template on page 50 helps you make all four legs with a uniform look*

Woodsmith GO ONLINE EXTRAS

If you have a CNC machine, a DXF file for the leg shape is available at Woodsmith.com

▲ The decorative elements in the aprons and corner blocks echo the look of the center spindle. They also provide plenty of support for the marble top. If you prefer, there's a wood top option, as well.

► At the core of this table is a center spindle made from glued-up stock. The legs and stretchers are joined to it with mortise and tenon joinery. Combined, they all make for a strong base.

Illustrations: Harlan V. Clark

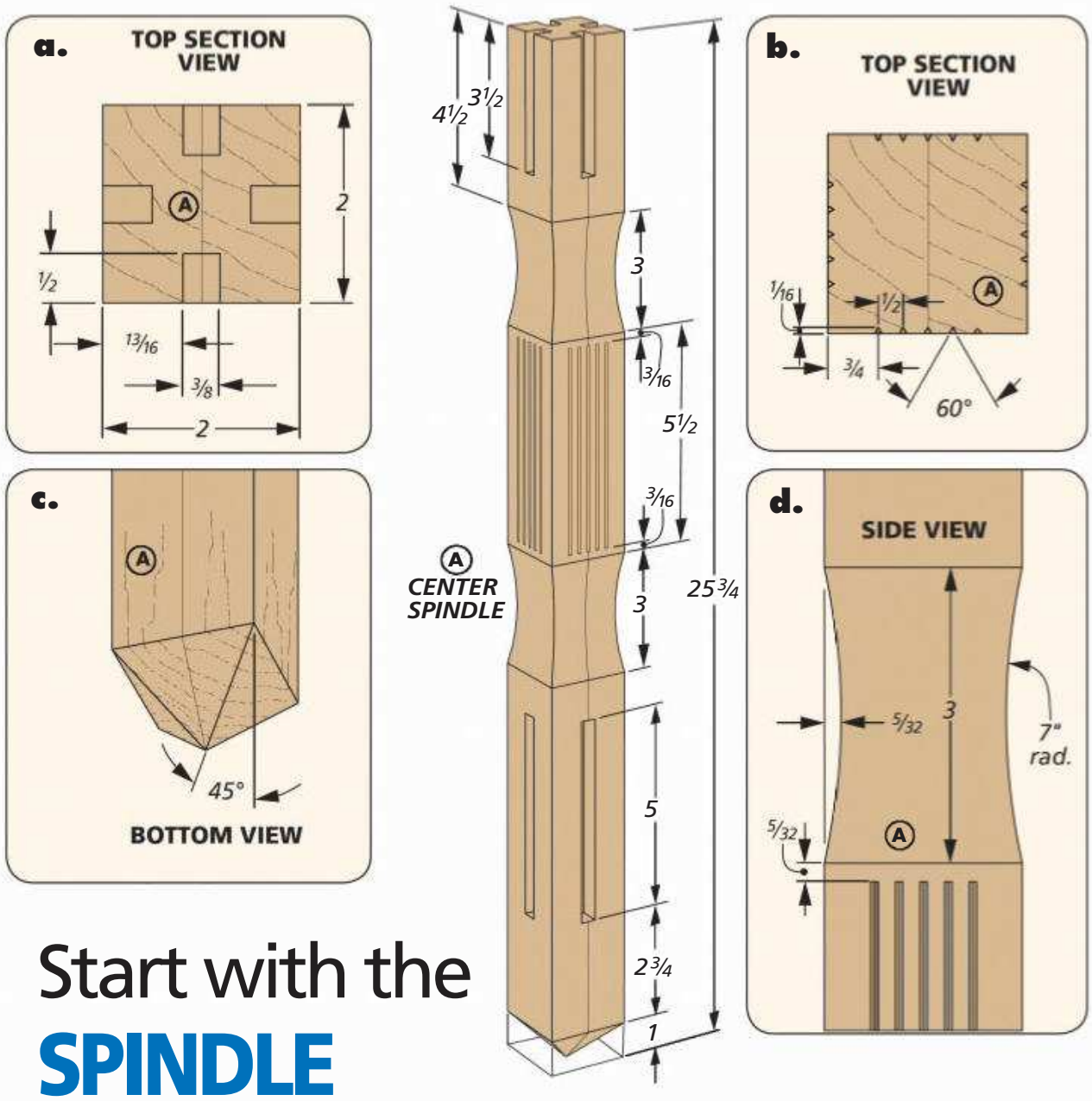

▲ Creating the reeds in the spindle requires a scratch stock. The article on page 56 shows how to make and use this tool.

Start with the **SPINDLE**

The natural place to start working is with the piece that's at the heart of the project — the center spindle. While it's the structural core of the table, it fulfills that duty with some flair, as well. Here's a rundown of the details.

The spindle is made from a 2" square, glued-up blank. As you can see in the drawing above, the spindle has two sets of four mortises that hold the legs in place. The upper mortises hold the tenons of the stretchers also.

Between the upper and lower sets of mortises are three decorative sections. Starting near the middle of the spindle, there's a run of reeding that's done using a scratch stock (the tool you see in the photo above). The reeding is framed above and below by gentle coves that are cut into the spindle (detail 'd'). The last decorative detail is the point that's cut in the bottom of the spindle (detail 'c'). This detail here, and in the corner blocks, looks much better than a blunt end on the workpiece. All of this starts with a square blank, so let's do that first.

How-To: SHAPE THE SPINDLE

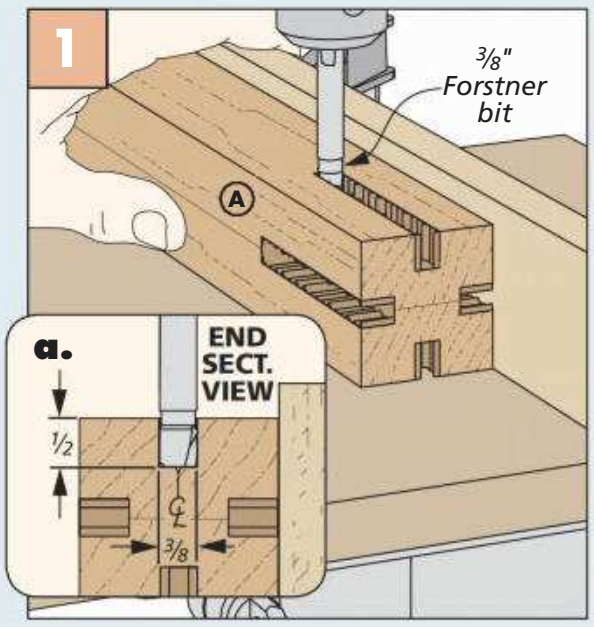

Mortises. A Forstner bit makes short work of drilling the mortises. Clean up the walls and corners with a chisel.

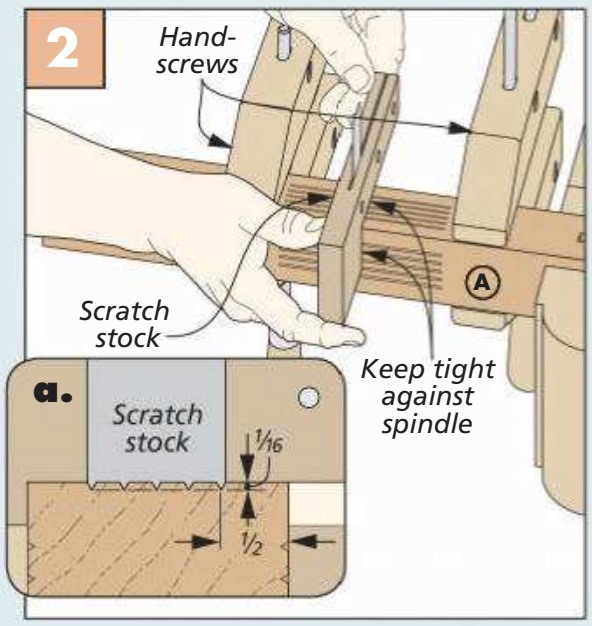

Controlled Scratching. Handscrews make ideal stops when scratching in the reeds on the center spindle.

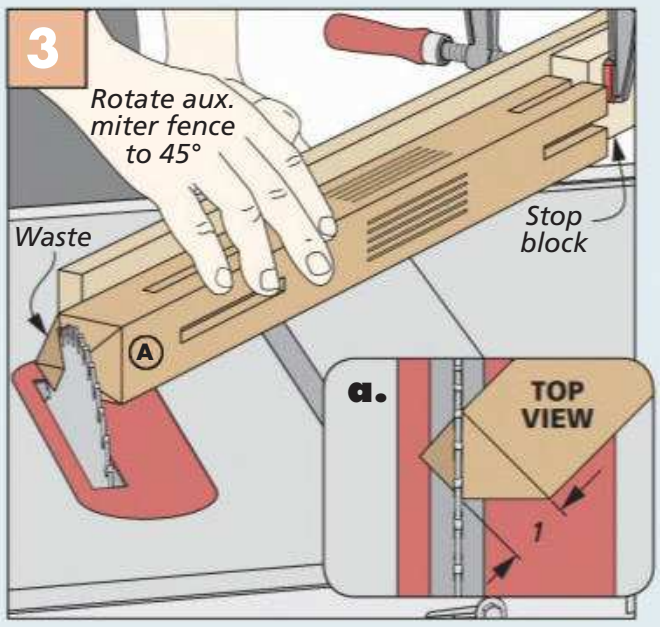

Perfect Point. A miter gauge fence and stop block lets you cut a centered point on the bottom of the spindle.

THE SPINDLE BLANK. The blank for the spindle is glued up from two 1"-thick pieces of hardwood. After sizing and planing the stock to the proper thickness, face glue the blanks. Even though the spindle is somewhat hidden in the center of the table, be mindful of grain patterns and joint lines when matching the pieces. You don't want any visual competition for the decorative reeding.

MORTISES FIRST. Laying out the mortises is the next order of business. Detail 'a' on the previous page shows their dimensions, and the main drawing shows the position of the eight mortises along the spindle. Figure 1 on the previous page gives you all the details you need on how to make them. When you're finished with the mortises, you have some hand work to do back at the bench that's a refreshing change.

SCRATCH STOCK. As I mentioned earlier, the reeds that are cut in the middle of the spindle are made with a custom scratch stock. In the past, I've made similar reeds with a router and V-groove bit. But the ones that are done here on the spindle, and later on the corner blocks and aprons, are way too small to be done with a router.

The scratch stock isn't a difficult tool to make or use. Turn to page 56 to learn all about this handy tool. To control the length of the reeds, use a pair of handscrews as stops on the spindle (Figure 2).

GETTING TO THE POINT. Complete the spindle by cutting the point on the bottom. I used a long auxiliary fence attached to my miter gauge (Figure 3). On the end, I clamped a stop block to ensure even cuts on all four sides.

COVES. All that's left to do is create the two sets of coves that complete the decoration phase of the spindle. I considered doing this at the band saw. There are two problems with that strategy — making a smooth entry, and prematurely cutting away your layout lines on adjoining faces.

A solution is shown in the How-To box to the right. It's a jig that's shaped to guide a flush-trim bit. It clamps in place on the spindle and has a curved opening in the fence. This guides the bit for making perfectly sized coves that complete the spindle. Now it's on to the legs.

How-To: BUILD & USE THE COVE CUTTING JIG

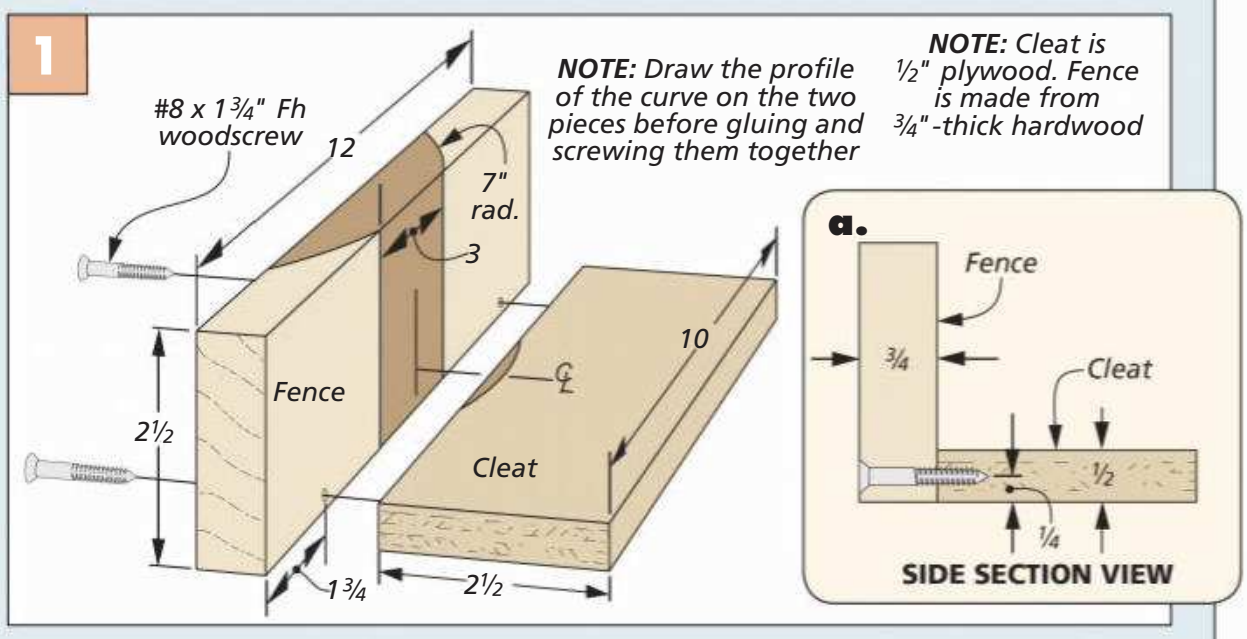

Basics of the Jig. The two pieces that make up the jig are held together with glue and screws. The fence the bit runs against is wider and longer than the cleat. The cleat holds the jig flush to the edge of the spindle.

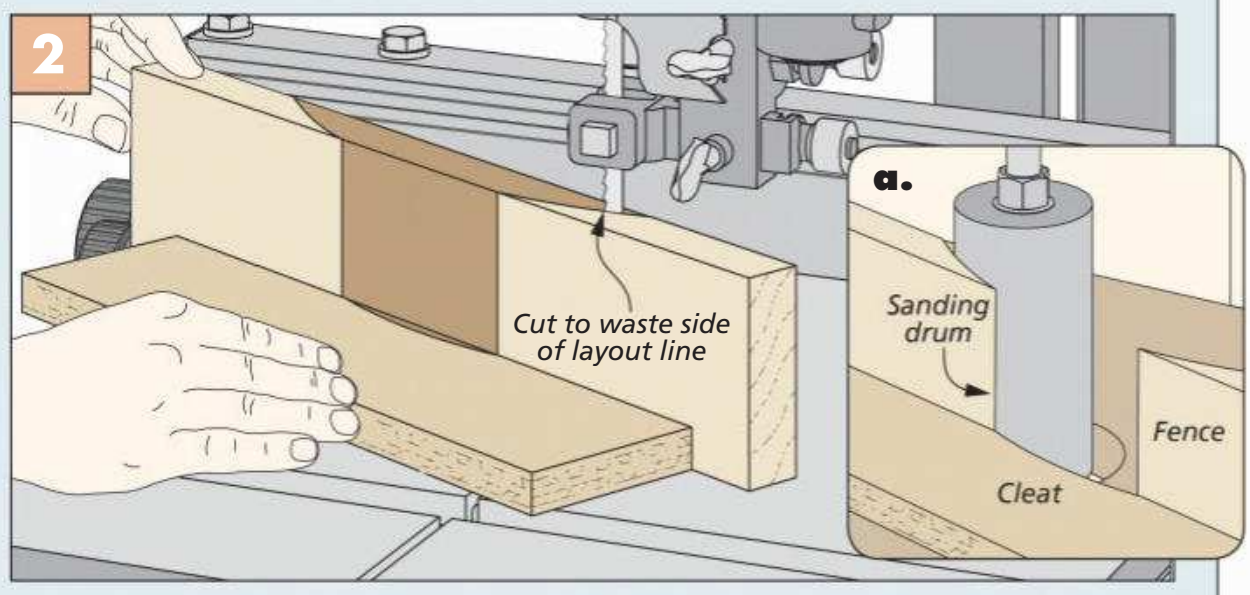

Shaping the Jig. The band saw is the tool to turn to when cutting the curve to make the cove profile in the jig fence and cleat. After the rough cut is done, smooth the profile with a sanding drum on the drill press.

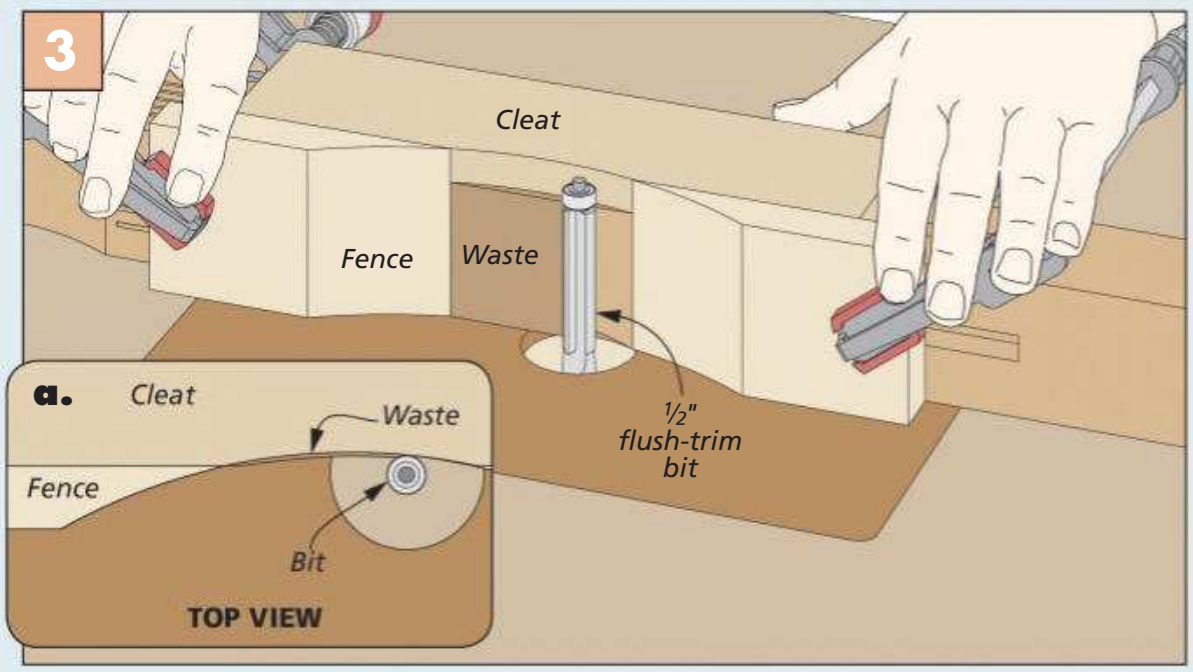

Routing the Coves. Start by clamping the jig to the spindle and take the setup over to the router table. There, use a long flush-trim bit to make the cove. As you're going, make light passes to avoid burning the spindle.

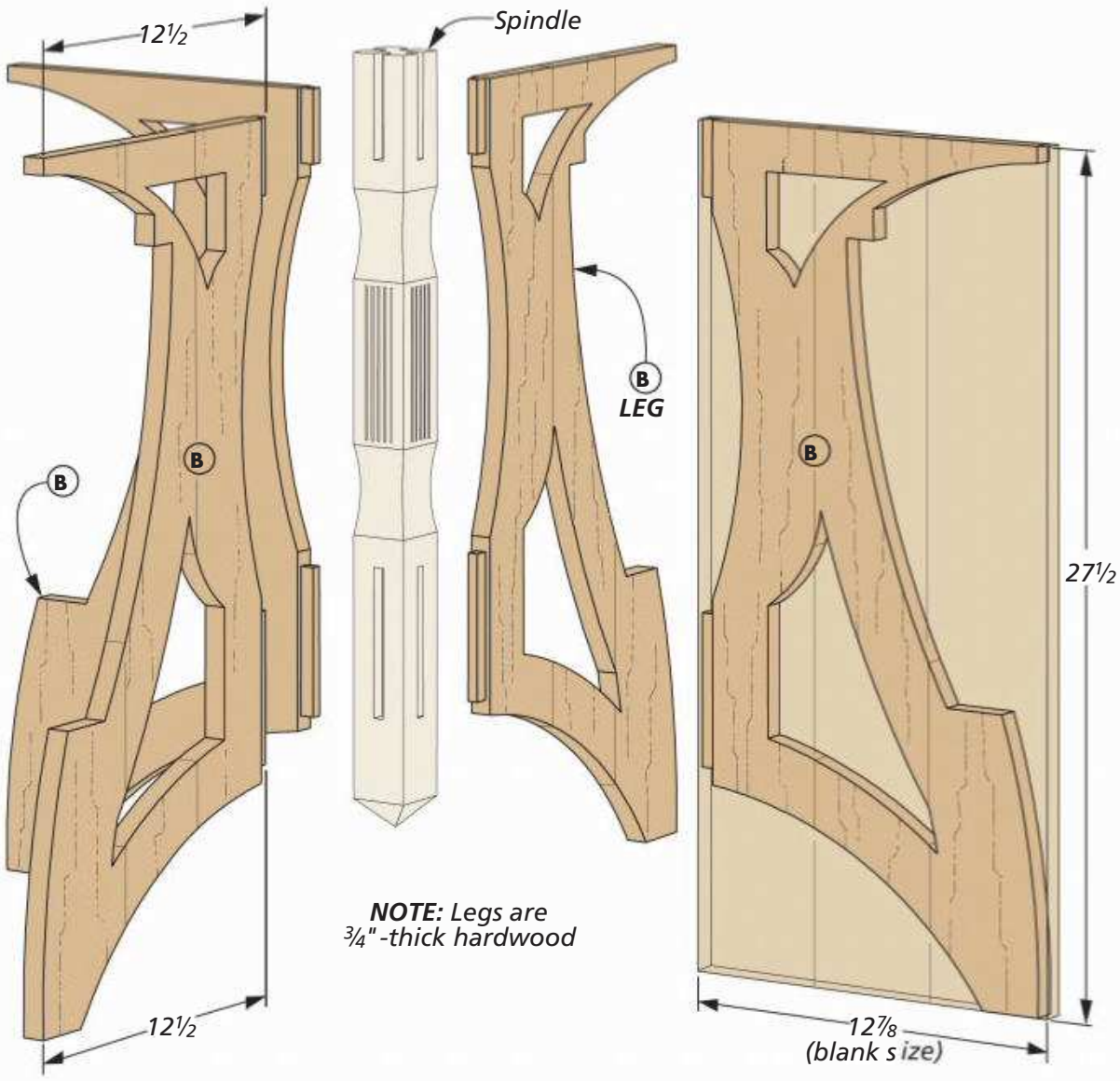

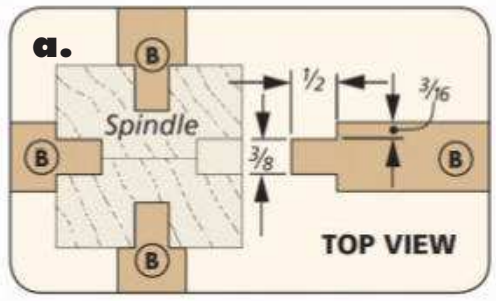

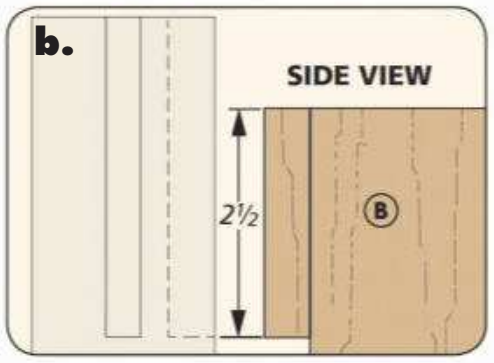

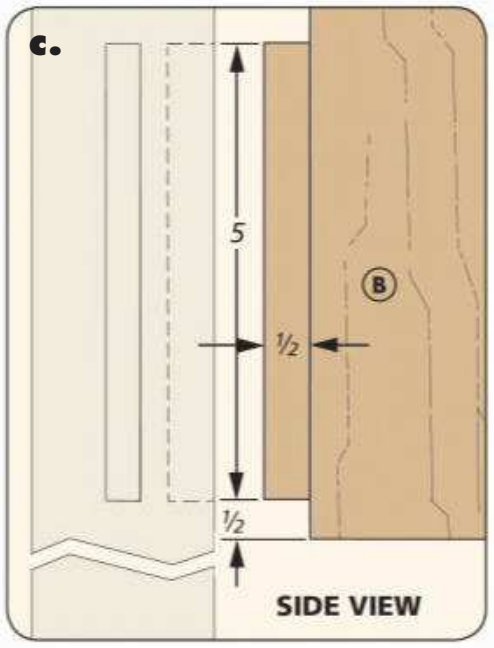

Shaping the **LEGS**

With the center spindle done and set to the side, you can turn your attention to the legs. As you'll notice in the drawing above, each leg for the table is cut from a wide, glued-up blank. They are joined to the mortises in the four sides of the spindle with tenons and fan out from there to support the table (detail 'a').

The leg profile design you see in the template below was created with the spirit of the Eastlake style in mind. When it came to tables, the style tended to put a lot of creative energy into the legs, so it seemed appropriate to keep that tradition going. For the sake of identical legs, I used the pattern to make a hardboard template to work in tandem with my router and a pattern bit.

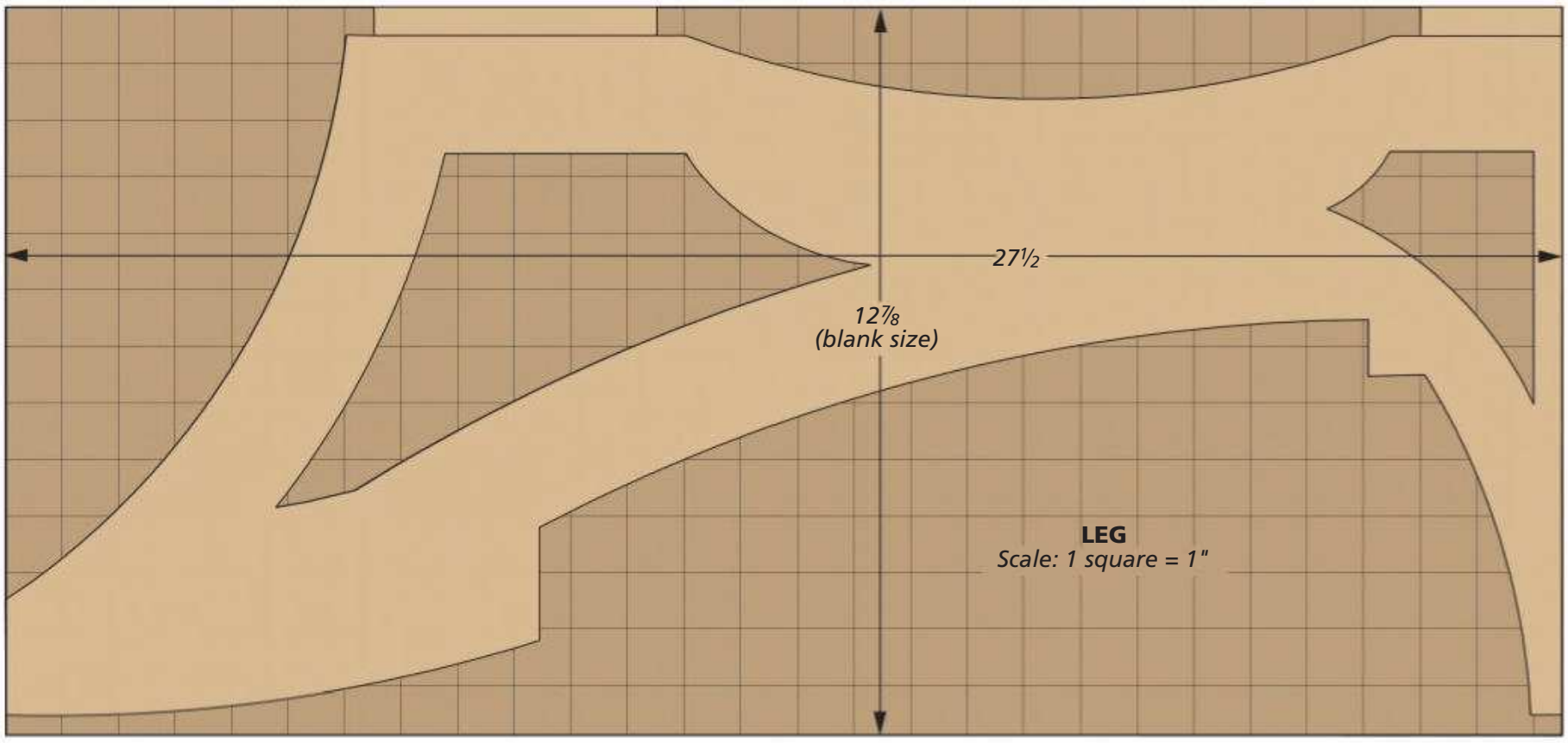

GLUE UP. To begin, I cut the stock for the leg blanks slightly long for the glue up. To avoid bowing the panels while clamping the pieces together, go easy on the pressure and confirm that they've remained flat. When the glue is dry, and the excess is scraped away, trim the panels to their final size.

TENONS. Over at the table saw, it's time to cut rabbets along one edge of each blank. This will make the tongues that you'll shape the tenons from. Figure 1 shows the process for doing this. To remove the waste between the tenons, I attached a tall auxiliary fence to the miter gauge. As Figure 2 shows, it's just a matter of cutting the shoulders first, then cleaning away the waste areas.

TEMPLATE. Next on the agenda is laying out the shape of the leg on the blanks. As I mentioned earlier, I made a hardboard template using the pattern that you see on the bottom of the previous page. Then I traced the profile onto each of the blanks.

ROUGH OUT SHAPE. Once this is done, you can drill starter holes in the trapped waste areas (Figure 3). Then, with a jig saw, rough out the shape of each leg as shown in Figure 4. You'll have to reposition the blank as you move to the other side (Figure 5).

When cutting with the jig saw, stay on the waste side of the line and take your time. If you go too fast, the blade could wander and make more work when it comes to cleaning up the profile.

Dennis, the designer of this project, used a CNC machine to create the leg profiles. If you have one of these machines, you'll find a downloadable DXF file at *Woodsmith.com* that you can use to shape the leg.

ROUT WITH TEMPLATE. You should be able to realign the template to the blanks with the pencil marks from the original tracing. If some of the lines are missing, use a square to align the tenons on the template to the tenons on the legs. When I was comfortable with the alignment, I attached the template to the leg panel with double-sided tape.

Figure 6 shows how to set this up at your workbench. With a pattern bit in my router and the leg resting on some riser blocks, it doesn't take long to rout a smooth, clean profile on the blank. The riser blocks give the router bit plenty of clearance beneath the leg.

CLEAN UP. The router does a great job on most of the leg, with the exception of the tight corners. To make all those junctions crisp, I used a file to cut the shapes. In the really tight areas, I used folded sandpaper to finish it off. With that, you've completed all the base parts of the table. Set the legs aside while you turn to making the other parts.

How-To: SHAPE THE LEGS

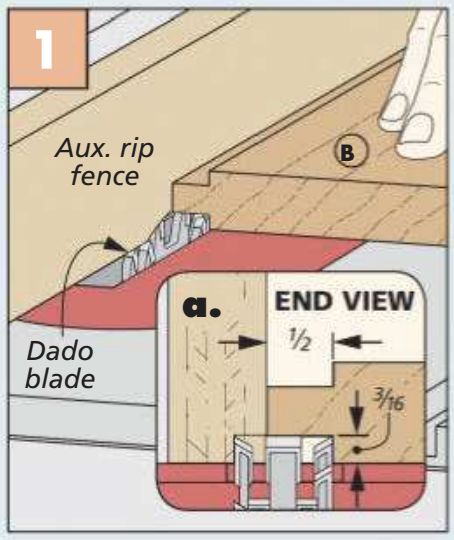

Rabbets for Tenons. Cut the rabbets in the side of the leg blank at the table saw.

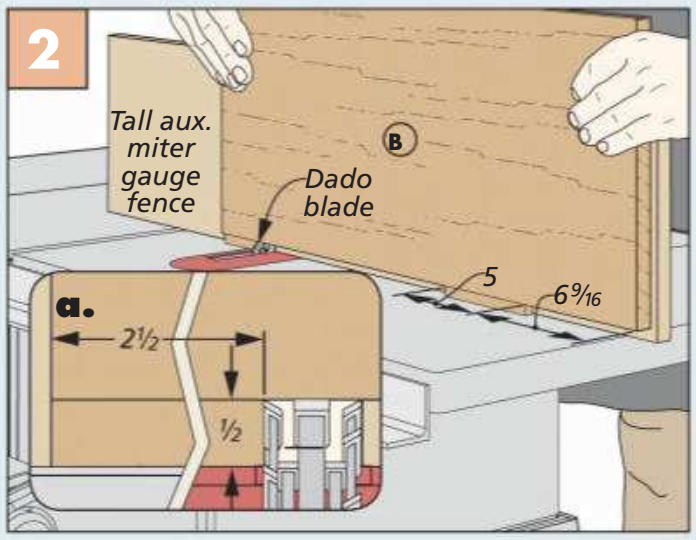

Shoulders for Tenons. To support the leg blank while removing the waste around the tenons, use a tall auxiliary fence.

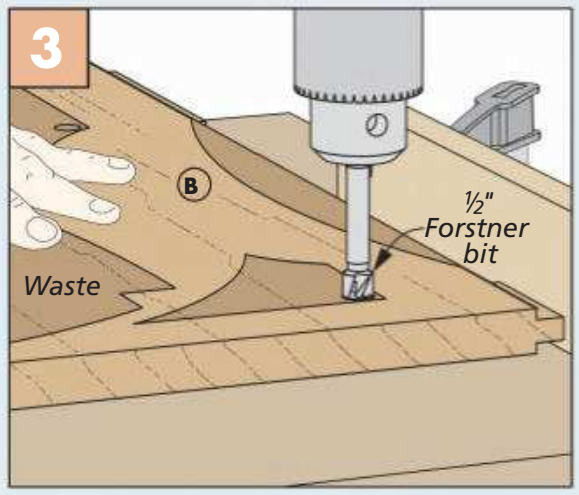

Starter Holes. Use a Forstner bit at the drill press to drill starter holes in the closed areas of the leg profile.

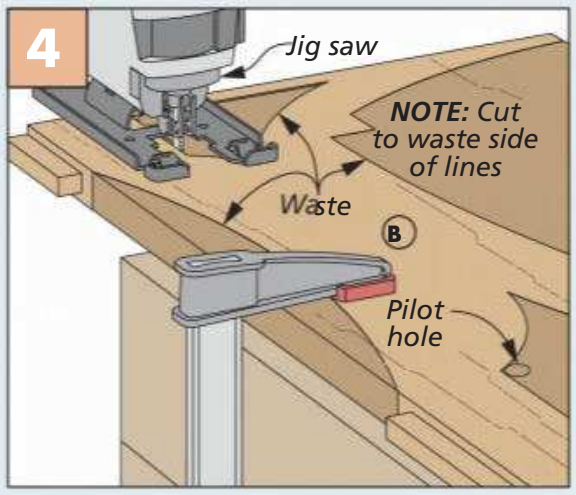

Clear Out Waste. With the leg blank clamped to your bench, cut out the waste areas with a jig saw.

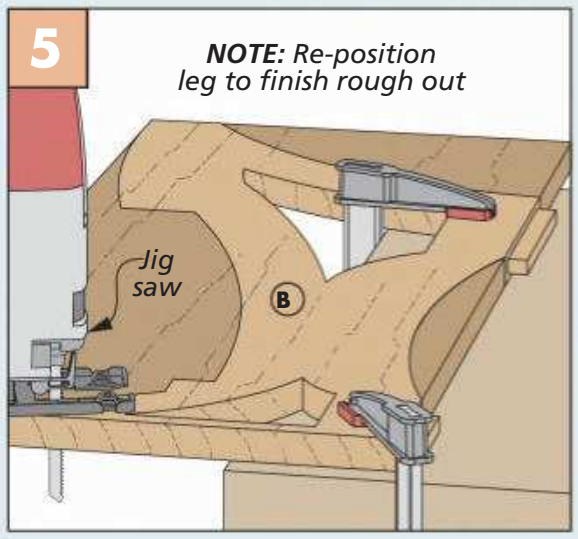

Rough Out the Profile. Next, shift the leg and clamps to remove the outer waste areas of the leg.

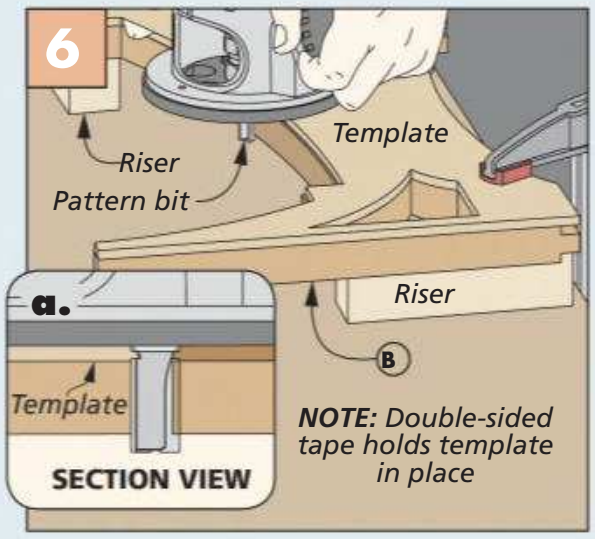

Template Time. Tape the template to the leg, then elevate the setup to provide clearance for the router bit.

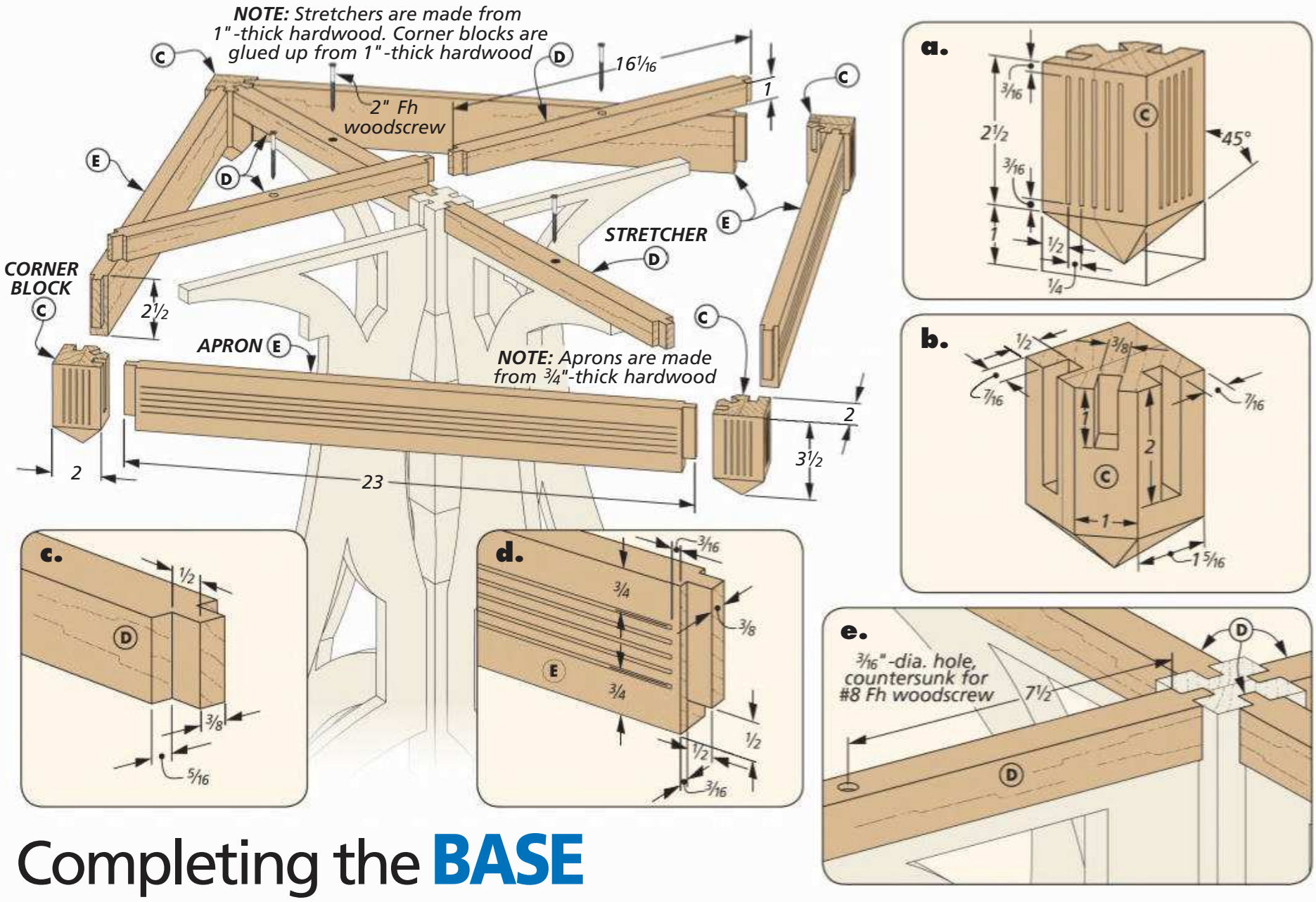

Completing the **BASE**

It's time to set your sights on the frame assembly you see in the drawing above. Earlier, I compared the center spindle to a tree trunk. In keeping with that idea, what we're doing here with the frame assembly is making the branches.

The frame assembly that supports the top is comprised of 12 parts. It starts with a set of stretchers (details 'c' and 'e') that link the base assembly to the frame. The frame is made of four corner blocks and aprons (details 'a','b' and 'd') that mimic the look of the center spindle with a matching reed pattern. I started at the table saw with the corner blocks.

CORNER BLOCKS. Each corner block has three mortises. And since they're relatively short, I glued up a couple of long

How-To: MAKING THE CORNER BLOCKS

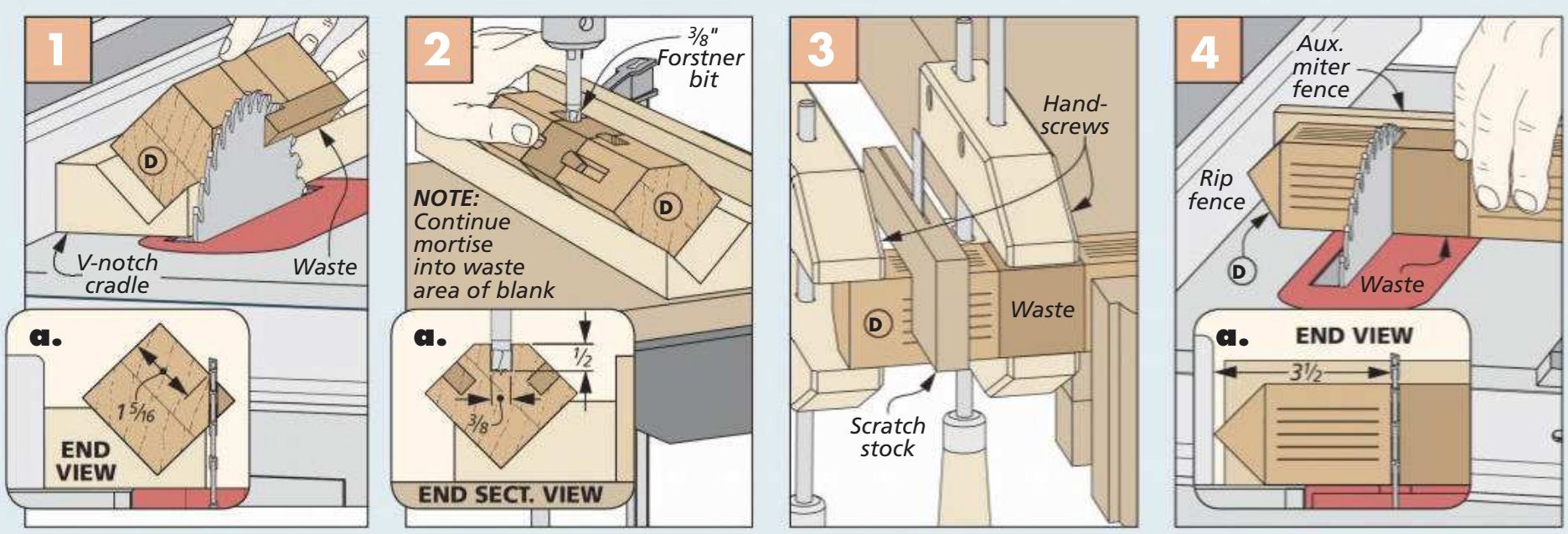

Chamfer. A cradle supports the blank while cutting the surface for the corner block.

Mortise. The cradle is used to hold the blank in place while drilling the mortise.

Reeds. Handscrews are used as stops to control the length of the reeds.

Cut Free. An auxiliary fence on the miter gauge supports the block while you cut it free.

blanks that let me safely make two blocks at a time. The How-To box on the previous page gives all the details. With those out of the way, it's time to make the stretchers.

STRETCHERS. After sizing the blanks for the stretchers, cut the rabbets in the ends of each piece to form the tenons. This is shown in Figure 1 to the right. Then drill countersinks and pilot holes.

APRONS. Turning to the aprons, start by cutting and milling the apron blanks to width. But before cutting them to length, scratch in the reeds in the surface in the same manner as done previously (Figure 2). I did this before cutting the tenons so that I had plenty of clamping surface for the jaws of the handscrews that are used for stops.

APRON TENONS. With the reeds complete, I moved back to the power tools. At the table saw, cut the tenons in the ends of the aprons as you see in details 'a' and 'b' of Figure 3.

ASSEMBLY

The number of workpieces that make up the top assembly presents a bit of a challenge at this stage of the game. During the assembly phase, the table parts have to be held square to each other along with the center spindle.

Plus, there are a lot of surfaces (legs and spindle, as well) that need to be stained. And getting stain into all of the nooks and crannies can be a pain. So to herd all of these cats, I came up with a plan of attack that follows.

TIME TO STAIN. Stain all the parts first. (I placed some rags in the mortises of the spindles and corner blocks to prevent stain build-up.) I chose to stain the project with a water-based dye that comes from *TransTint*. Sources on page 66 has the details. Then once the pieces were dry, I test fit all the parts to ensure proper-fitting joints. With all the prep done, you can move on to the glueup.

GLUEUP, PART 1. The first glueup includes the corner blocks, aprons, stretchers, and center spindle. Do this upside down on a flat surface. Make sure the spindle stays square to the stretchers as you clamp them up (Figure 4).

GLUEUP, PART 2. With the clamps off, but still close at hand, I glued two opposing legs to the spindle (Figure 5). When those were dry, I added the other two legs to the assembly.

All that's left is to flip the table over and screw the stretchers to the legs (Figure 6). This adds rigidity to the table. At this time, I did an inspection of the table before applying a final finish. Two coats of satin lacquer gave a nice glow to the whole table. You're not quite done though, turn the page to consider your options for topping off the table.

How-To: MAKING TABLE PARTS & ASSEMBLY

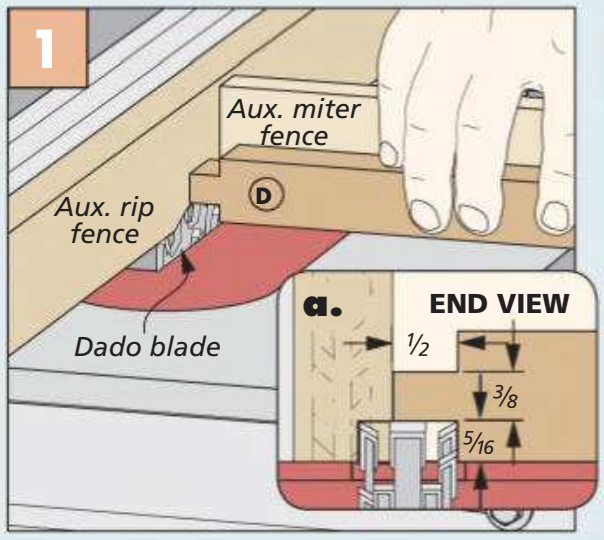

Tenons on Stretchers. With a dado blade, cut the rabbets on both ends of the stretchers to form the tenons.

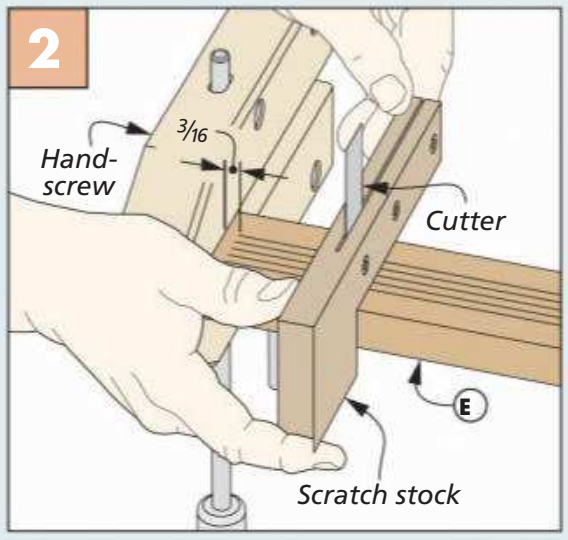

More Reeds. Clamp the aprons in your vise and use a handscrew to control the length of the reeds.

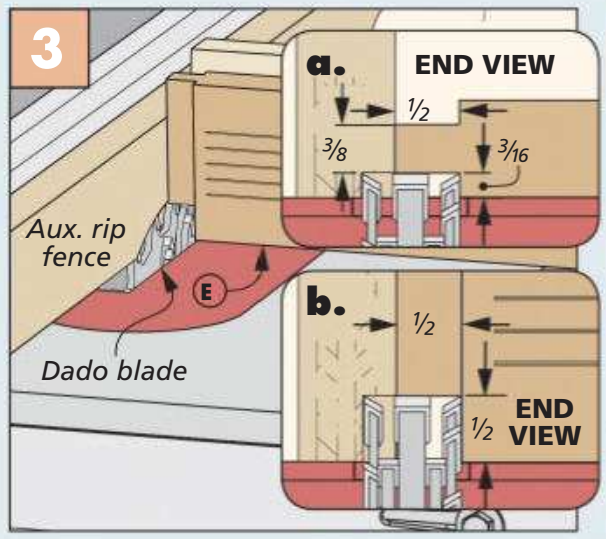

Tenons on Aprons. Back at the table saw, use a dado blade to form the tenons on the ends of the aprons.

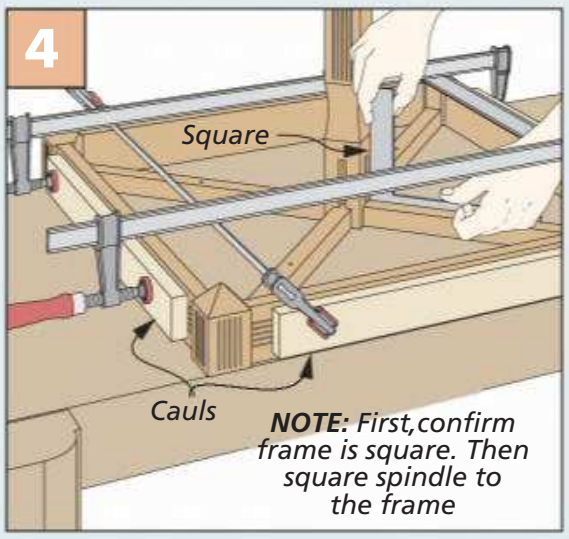

Glue Up. After staining and checking the fit with a dry assembly, glue up everything but the legs.

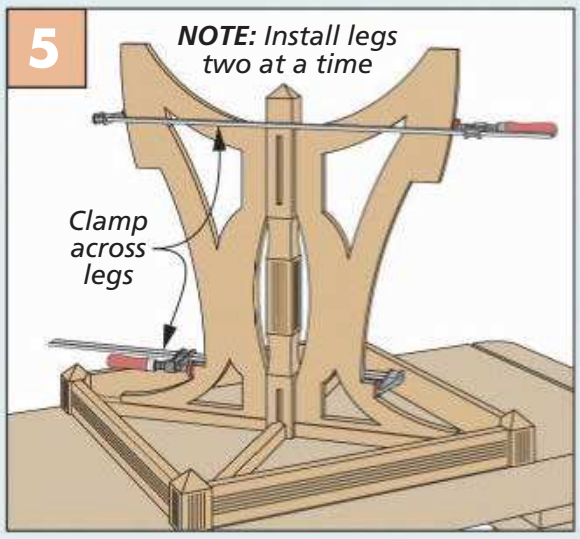

More Glueup. Attaching a pair of legs to the table is next. Clean up any glue squeezeout while it's soft.

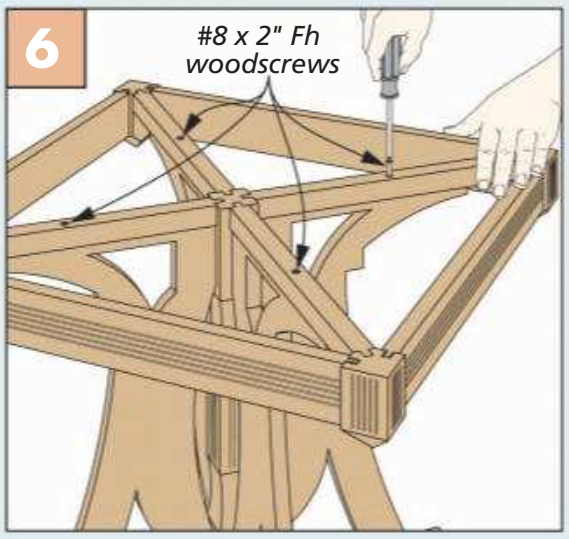

Attach the Legs. With the table right side up, attach the stretchers to the legs with screws.

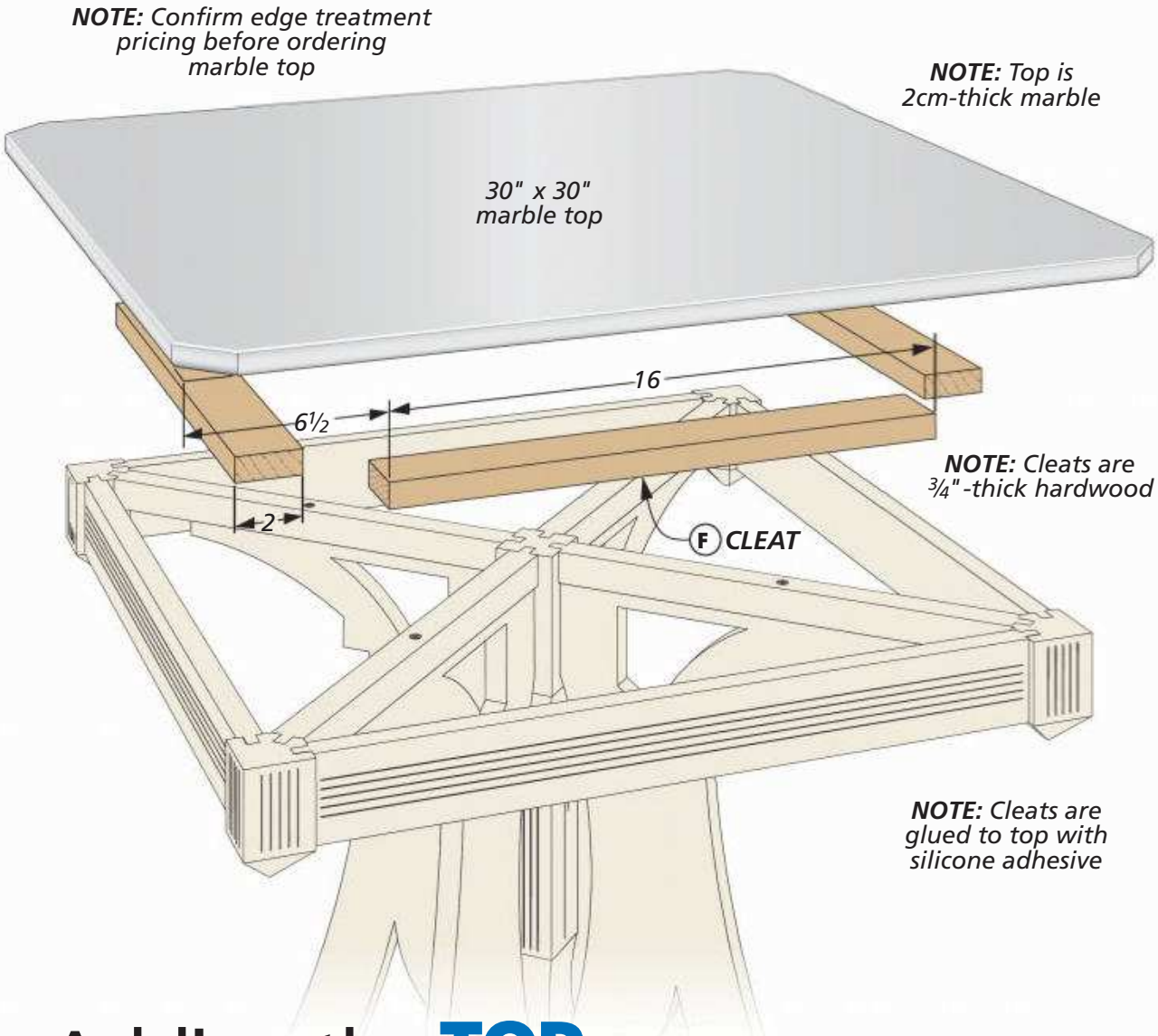

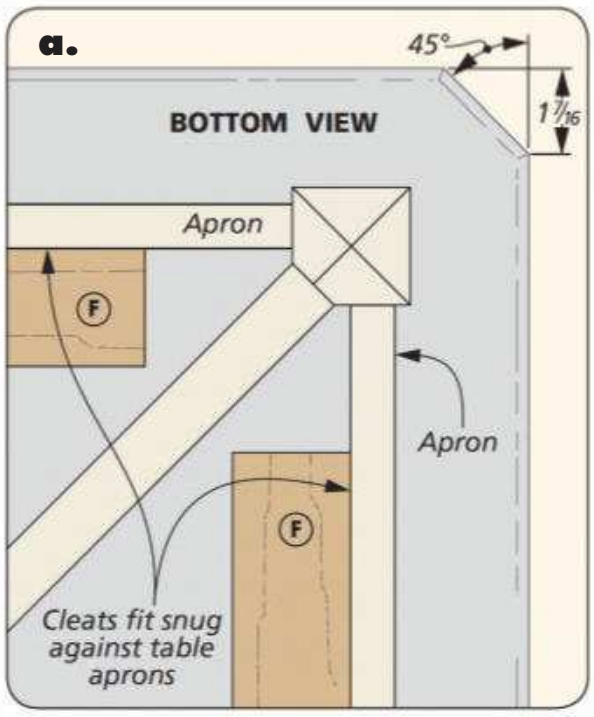

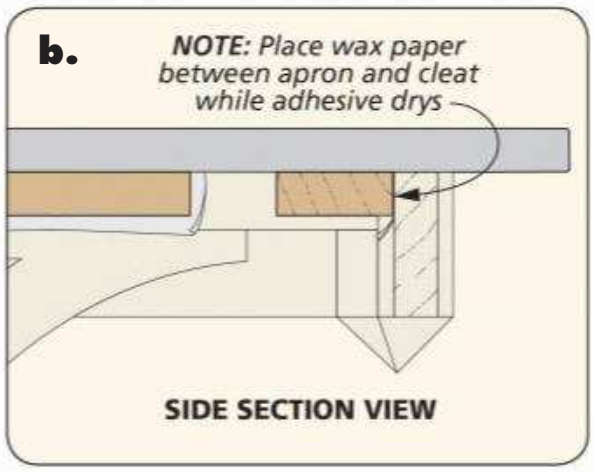

Adding the TOP

You've come to the pinnacle of your journey, the crowning achievement of your efforts. Well, that might be overstating things, but it's time to put a top on this table. As you see above, and in the photo at the beginning of this project, we used a material that was traditional for Eastlake tables and other furniture pieces in the style — marble.

The biggest challenge is simply finding a source. The best way to track down this material in your area is with an online search. A lot of countertop manufacturers stock and cut marble. Plus, they'll have useful information about handling the product. (The wood top that's shown on the next page is another way to go, it looks good as well.)

Marble is an organic material whose beauty is worth the effort. Because marble is brittle, take care when transporting it. Once in place, it's an attractive top indeed. Here's how to integrate the marble top safely with the table base.

POSITION THE TOP. When the top is centered on the frame, glue cleats to the underside (details 'a' and 'b'). Sources on page 66 has information on what adhesive to use. I used wax paper to prevent any adhesive from sticking to the aprons. The cleats hold the heavy top in place, but will also let you remove it when transporting the table.

Materials, Supplies & Cutting Diagram

A	Center Spindle (1)	2 x 2 - 25¾
B	Legs (4)	¾ x 12⅞ x 27½
C	Corner Blocks (4)	2 x 2 - 3½
D	Stretchers (4)	1 x 1 - 16 1/16
E	Aprons (4)	¾ - 2½ x 23
F	Cleats (4)	¾ x 2 - 16

- (4) #8 x 2" Fh Woodscrews
- (1) 30" x 30" Marble (2cm-thick)

Optional Wood Top:

G	Top (1)	¾ x 30 - 30

- (4) Figure-Eight Fasteners
- (8) #8 x ½" Fh Woodscrews

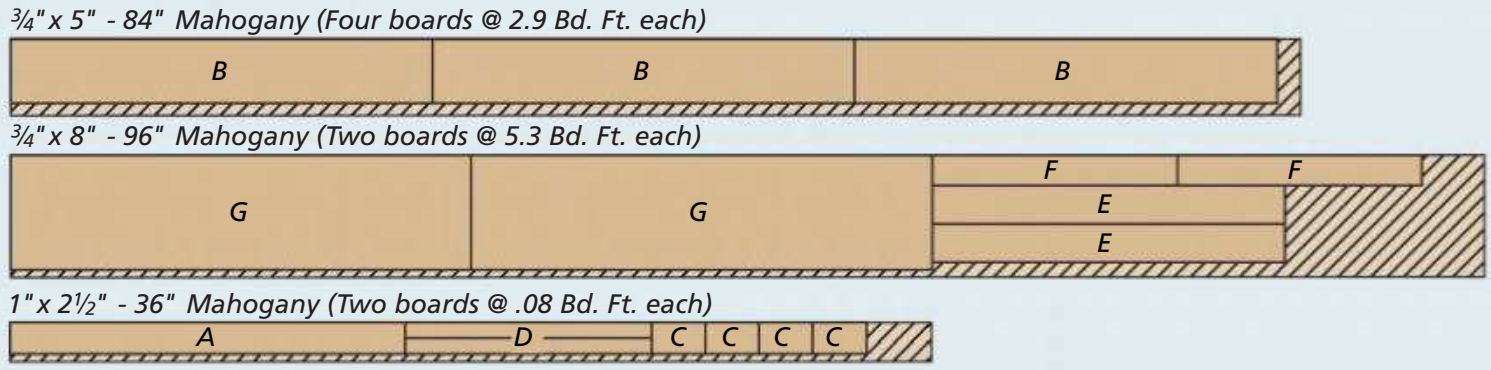

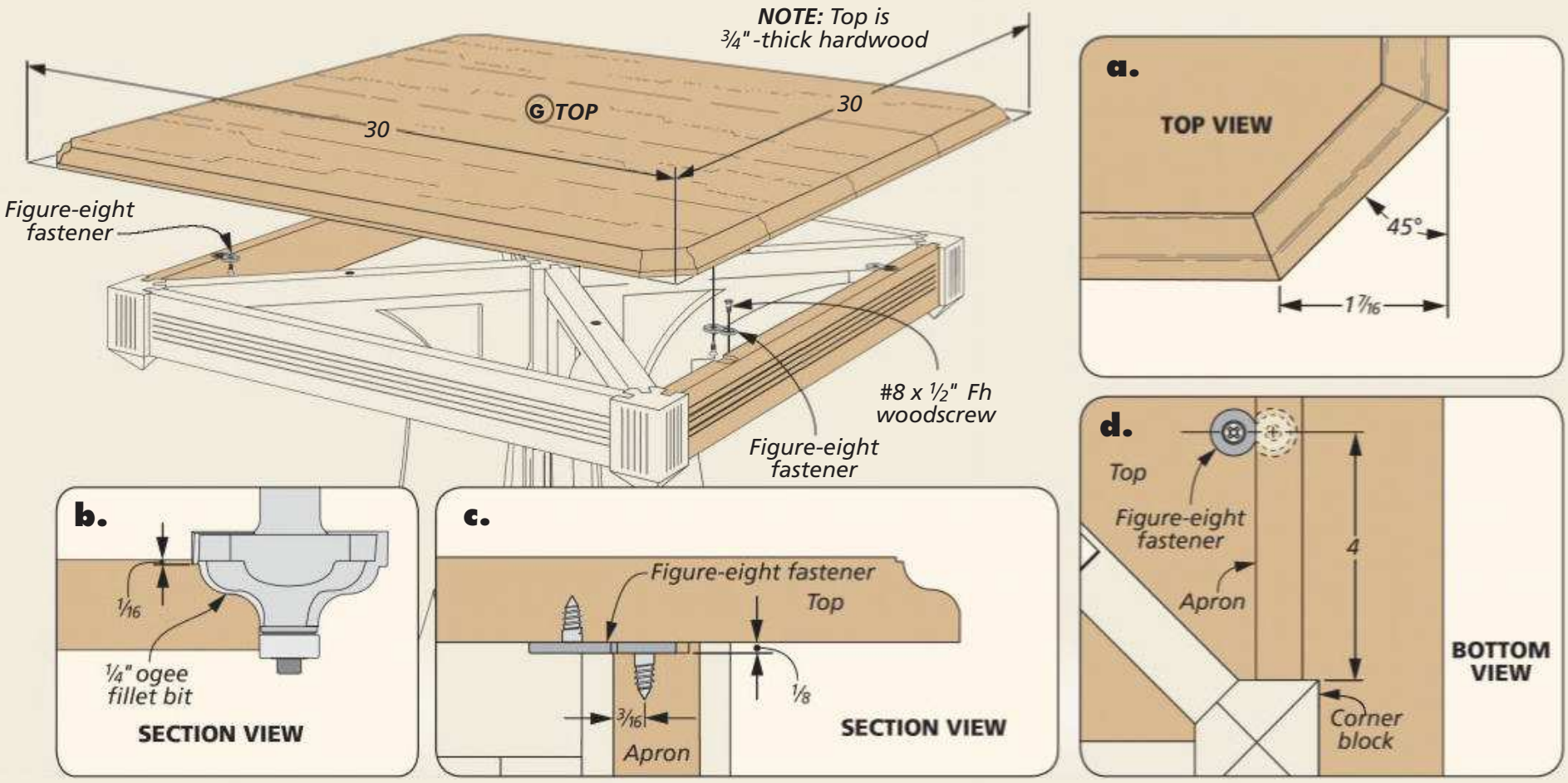

WOOD TOP

The hardwood top you see above is a great option for this table. Start by making a glued up blank and cut it to final size. When the glue is dry and the clamps are put away, lay out the corners (detail 'a' above). Then trim the top with a jig saw (Figure 1).

OGEE PROFILE. A classic ogee profile plays well with all the Eastlake design elements. I routed the edge in several passes to avoid burning the wood. Figure 2 below shows this.

A large hardwood top is subject to seasonal movement. To control that problem, it's best to attach the top using figure-eight fasteners. These clever fasteners will pivot with the movement of the wood while holding the top in place. Figure 3 shows how to create the recesses in the aprons for the fasteners.

And with that step (along with staining the top and adding a couple of coats of lacquer), you've added a fine period piece of furniture to your list of woodworking accomplishments. W

While the marble top is part of the traditional Eastlake style, the wood option you see here is just as interesting and inviting.

How-To: MAKE & INSTALL A WOOD TOP

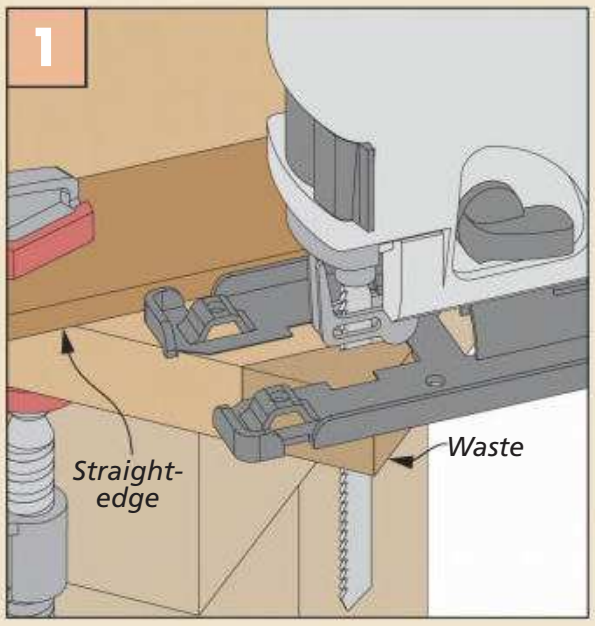

Cutting Corners. After laying out the corners on the top, use a jig saw to cut away the waste. Then sand smooth.

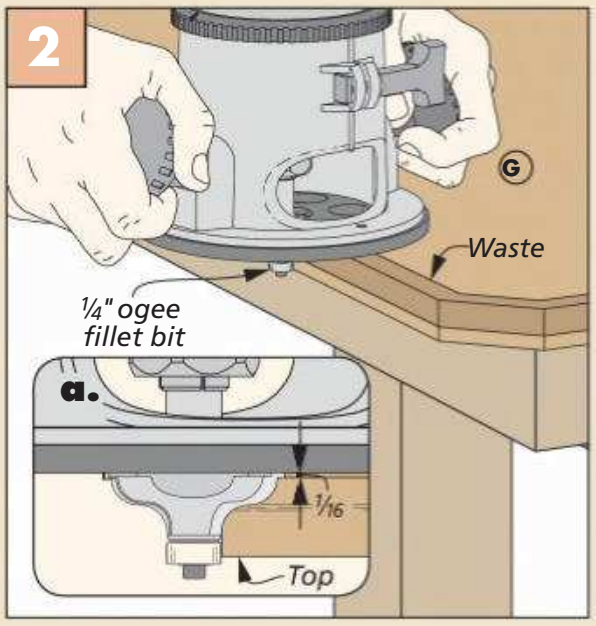

Routing the Profile. With an ogee bit in my router, I routed the profile on the edge of the top in multiple passes.

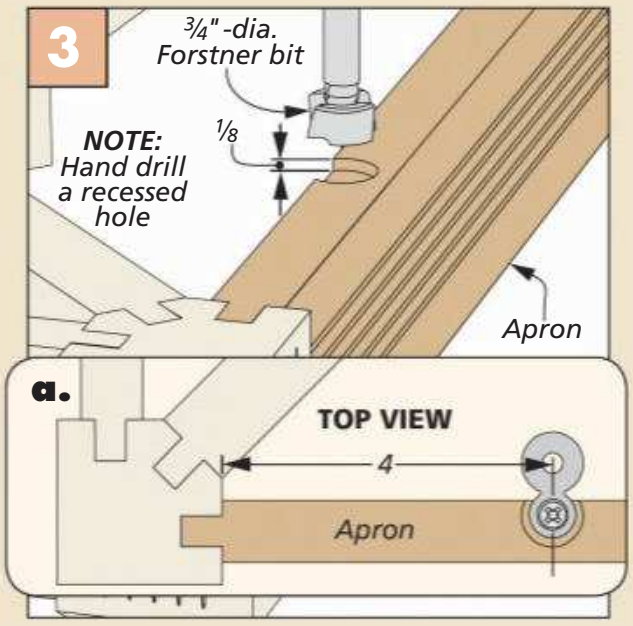

Attach the Top. Cut a recess in the top edge of the aprons. This is where you'll attach a figure-eight fastener.

Create profiles with a Scratch Stock

Decorating a project like the Eastlake table that's on page 46 means diving into some historical woodworking techniques. Before electric routers, decorating furniture and cabinets meant breaking out custom planes to dress the edges and profiles of workpieces.

A scratch stock is a variant of those custom planes on a smaller scale. While there are router bits that create some of these profiles, you can save money by making these tools for special profiles that you might not use that often.

Scratch stock is a name that loosely refers to the wood part that holds a cutter that "scratches" the workpiece. The combination of the two can be used to create many different profiles, from a simple bead on the edge of a board, all the way up to a group of five reeds like the ones you see in the photo above and on the Eastlake table.

A SIMPLE TOOL. The tool you see here is a simple tried-and-true version of a scratch stock. It can cut profiles in workpieces that are straight or curved. The wider, shorter leg is like a fence that runs against the edge of the workpiece. The long arm holds the cutter that scratches the profile into the surface of the workpiece.

To make the scratch stock, start by cutting out an L-shaped blank as shown in the drawing below. You need to cut a long kerf in the arm of the blank to accept the cutter. You can do this step at the band saw or with a handsaw.

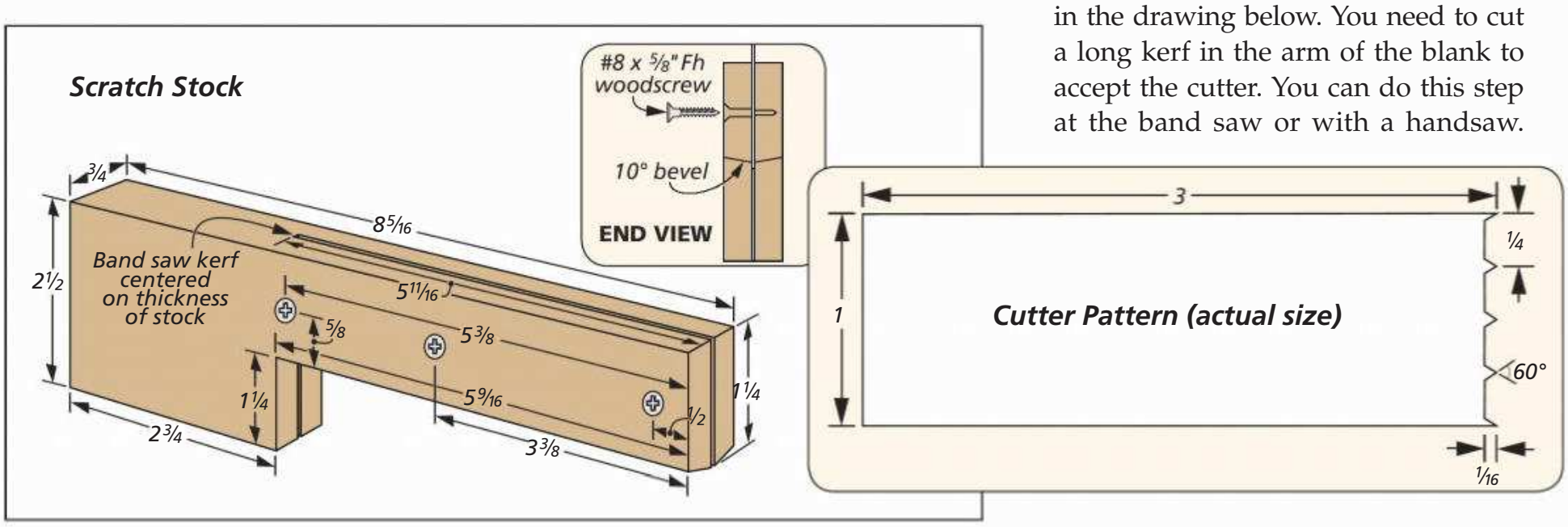

Written by: Erich Lage

An old card scraper is the perfect candidate for the cutter. Score a line on the scraper and clamp it in your vise. A sharp strike with your hammer will break the scraper at that point.

Glue the pattern (see previous page) to the cutter blank. Before filing the exact shape, use a rotary tool to rough cut the shape of the tooth profile onto the cutter blank.

What you're aiming for is a kerf that's the same thickness as the cutter. This allows the stock to grip the cutter tightly.

Notice in the end view detail on the previous page that the underside of the arm is beveled to a point at the center. I shaped this with a rasp and file. You'll see shortly that creating this bevel makes the performance of the tool much better.

MAKING THE CUTTER. Picking the metal for the cutter is a Goldilocks moment. You don't want the steel so soft that it loses its shape quickly, nor so hard that it's brittle. I found the perfect balance in an old card scraper. It's easy to harvest a bit of the scraper to make the cutter. The steps shown above will lead you through the process of creating the profile that's used on the Eastlake table.

INSTALL THE CUTTER. There's a couple of things to consider when installing the cutter. First, is the depth of cut. For all the table parts, the gullet is flush to the arm. The distance from the leg depends on which piece of the table you're dressing. Now that the workpiece is in position and the scratch stock is set up and ready to go, here are a few things to guarantee success.

To keep vibration at a minimum while filing the profile of the teeth, I clamped the cutter securely in a vise.

To hone the cutter, run it across your waterstone, diamond stone, or use sandpaper on a flat surface.

PLAN OF ATTACK. The drawings below will show you the best technique to use with a scratch stock. When starting any profile with a scratch stock, a couple of things are critical — holding the leg firmly against the workpiece and tilting the cutter to the surface of the wood. The bevel you made on the underside of the arm earlier lets you slowly roll the cutter into the surface.

You want to be patient and make multiple passes while scoring the profile. It's easy to get a little overconfident about the cutting process. What can happen is the grain of the wood can derail the straight path of the teeth ever so slightly. And once the scratch pattern has wandered, it's hard to repair it.

FINAL PASS. Regardless of how sharp the cutter is, cutting the profile you've made in the workpiece often benefits from a final light pass. While doing this, hold the scratch stock perpendicular to the workpiece.

This should get you headed in the right direction when using a scratch stock. To say that using this tool is an easy, economical way to add dimension to a project would just be scratching the surface. Sorry, I couldn't resist. W

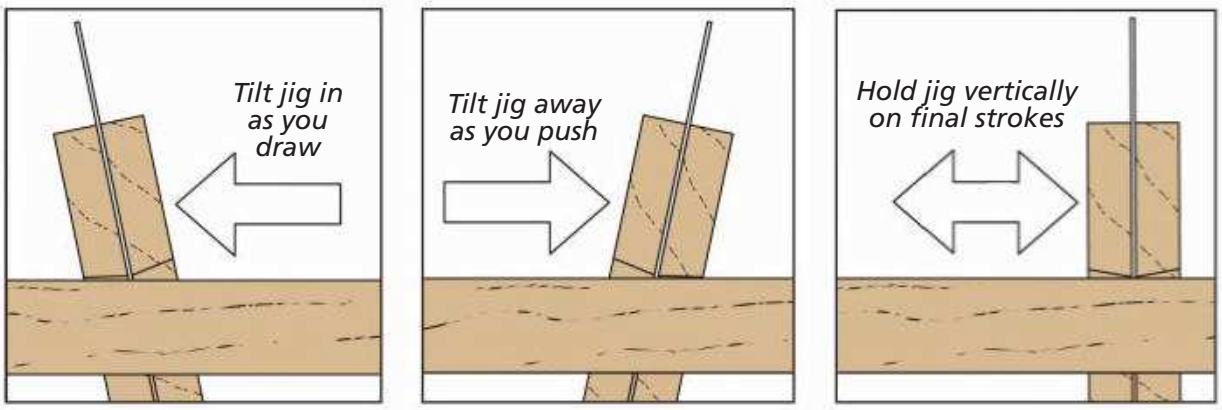

Angle It. Tilting the scratch stock is how you control depth-of-cut. Working in a back-and-forth method is the best way to establish the scratch stock pattern. For a crisp, clean look, finish the task with the tool perpendicular to the surface.

Illustrations: Bob Zimmerman

in the shop

Tips & tricks for

Patterns & Templates

Almost every woodworking project starts out as an assortment of parts. When those parts are straight and square, fences and stops can be used on tools like a table saw or band saw to create accurately sized parts.

But it's not unusual for some parts to have curves, cutouts, and other key details that typically can't be taken care of with a simple fence setting. And when those shaped parts need to be identical, you need something else in your toolkit to deal with them. That's where patterns and templates come in handy. They're life-savers for accuracy, repeatability, and saving time.

PATTERNS

Although the terms pattern and template are often used interchangeably, I consider them to be different. In my shop, a pattern is nothing more than a two-dimensional representation of the shape of a project. A pattern is often used where describing that shape isn't easily represented by numbers, like width and length.

A great example of where a pattern comes in handy is the curves along the lower edge of a table stretcher or the rail

A light coat of spray adhesive offers an easy way to attach a paper pattern to the surface of the workpiece.

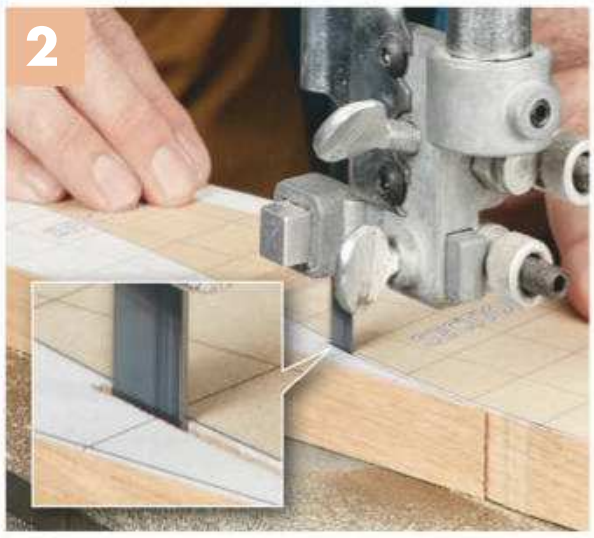

After attaching the pattern, remove the bulk of the waste by making a cut close to the pattern line.

Hand and power sanding makes quick work of sanding outside curves up to the layout line of the pattern.

Written by: Bryan Nelson

of a cabinet base. It can even be something as simple as the corbel under the arm of a chair. In most cases, if you're building the project from plans in a book or magazine, the pattern is often provided in the issue or online as a file you can download.

TRANSFERRING THE PATTERN. To make use of the pattern, you'll need access to a printer or copier, depending on how the pattern is provided. If the supplied pattern isn't full-size, you can increase the size on the printer or copier. The increase is usually shown on the plan as a percentage, like 200%. Regardless, any time you copy or print off a pattern, make sure to pull out a rule and double-check that everything is scaled correctly.

ATTACH THE PATTERN. Once you have the pattern printed out, it's a simple matter to use spray adhesive to attach it to your workpiece (Photo 1, previous page). All that's left is to rough cut the pattern (Photo 2) and then file or sand right up to the lines for a perfect part (Photo 3).

This works well when you only need a couple of parts or the pattern is a simple curve. When I need to transfer the pattern to a number of parts, I prefer to create a master pattern using a piece of posterboard, like you see in the main photo on the previous page.

I prefer the heavier posterboard you can find at art supply stores. Here again, I photocopy the pattern and use spray adhesive to attach it to the posterboard. Then using a hobby knife, carefully cut along the outline of the pattern.

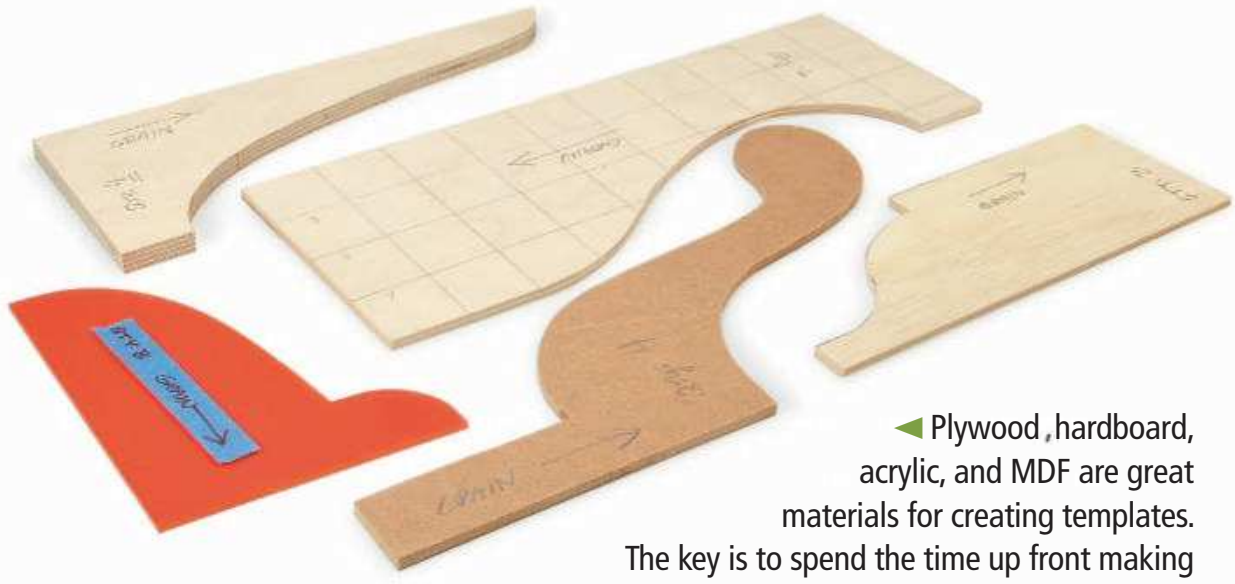

◀ Plywood, hardboard, acrylic, and MDF are great materials for creating templates. The key is to spend the time up front making sure the template matches the pattern exactly.

Using thicker material for your pattern means you can run a pencil along its edge multiple times to redraw the shape as required. What I like about the thick posterboard is you can write notes on it, save it, and use it in the future if you plan to build the project again.

TEMPLATES

All a pattern does is give you a guide for making the cuts needed to shape the part. There's still a lot of work to do to create the parts. In most cases, this won't take long. But when I need parts to be perfectly identical, I turn to a template.

THICKER MATERIALS. A template looks a lot like a pattern, but I use an even thicker material to create it. Baltic birch plywood, hardboard, and MDF are all great choices, as you can see above.

TIME-SAVER. Creating a template takes a little extra work over making a simple posterboard pattern. But the real time-saving comes when you use the template to create your parts. Like a posterboard pattern, you can use the template to transfer the shape to a workpiece (Photo 1 below).

ROUGH CUT THE SHAPE. Here's where things speed up. You start by making a rough cut to remove the waste, staying just outside the layout line (1/16" or so), as you can see in Photo 2 below.

A PERFECT TRIM. Once that's complete, you attach the template to the workpiece with double-sided tape. Then, use a flush-trim bit in the router table to remove the waste to exactly match the template (Photo 3). This process creates an identical copy. So be sure to spend the time upfront on the template to shape it perfectly. After that, creating workpieces is a pretty fast process. Plus, like a posterboard pattern, you can save the template and use it the next time you build the same project.

As you can see, making perfectly shaped parts doesn't have to be a hassle. Using simple patterns and precision templates helps you build smarter. W

▲ After aligning the template on your workpiece, transfer the shape by tracing along the edge.

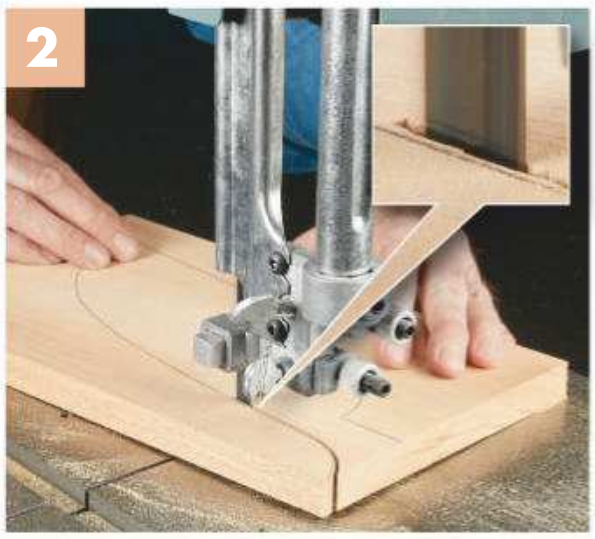

▲ Be sure to cut slightly outside the pencil line (inset) to remove the bulk of the waste on the workpiece.

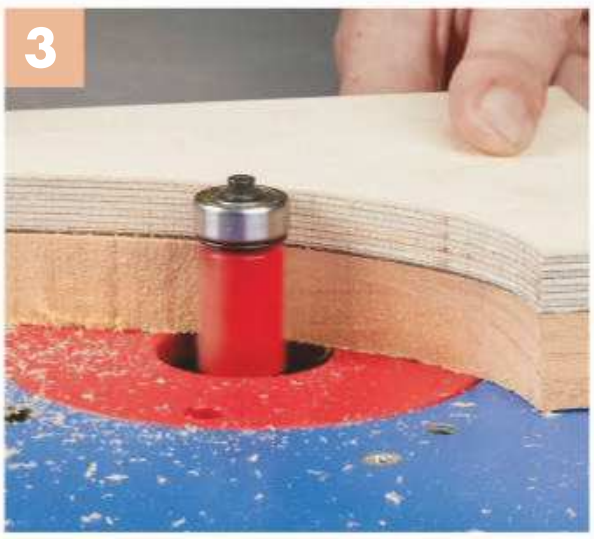

▲ Finally, attach the template with double-sided tape and trim the part to final shape at the router table.

My favorite

Add-on Squares

Building accuracy into any project requires the right tools. In my shop, my 12" combination square is always at hand for checking my progress in most cases. But depending on the project, a combination square may not be the best choice for the task I'm working on.

To solve these challenges and complement my combination square, I've added some additional squares to my collection, as you can see in the photo below. They're not all that expensive, and I think you'll find they're a great upgrade to any woodworking shop. (To find out where to purchase these squares, refer to Sources on page 66.)

Of course, a square won't do you much good if it isn't accurate. The box on the next page shows a simple way to check the accuracy of any square.

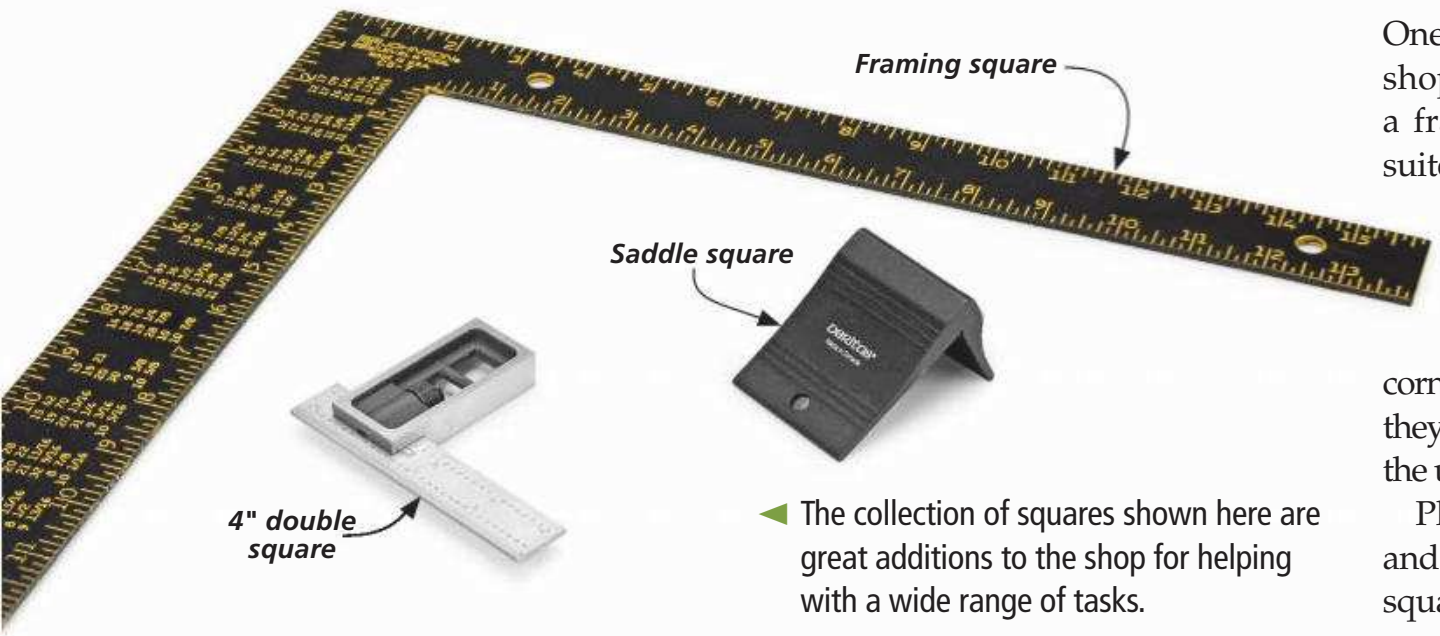

◄ The collection of squares shown here are great additions to the shop for helping with a wide range of tasks.

FRAMING SQUARE

One of the first squares I added to my shop was a framing square. I know, a framing square is something more suited to a construction site, right? I've found it comes in handy around the workshop for some key tasks.

CORNERS & ASSEMBLIES. For starters, I use my framing square to check the corners of large panels. This way I know they've been cut clean and square, as in the upper left photo on the next page.

Plus, when assembling those panels and other parts into a project, a framing square makes it easier to determine an

Written by: Bryan Nelson

Checking the corners of a large panel for square is a perfect task for a framing square. It works just as well for checking large assemblies for square, as shown in the main photo on the previous page.

The convenient size of a double square, along with the adjustable blade, allows you to quickly create layout lines along the edges of a workpiece.

out-of-square assembly over a combination square. An example of this is shown in the main photo on the previous page.

CHOICES. Framing squares are easy to come by. You'll find them in just about any home center or hardware store.

The biggest decision you'll have to make is whether to go with a steel or aluminum model. Personally, I like the aluminum version. It's lighter in weight so I can easily use it with one hand. And since it's aluminum, there are no worries about it rusting over time. Finally, scales on both the inside and outside legs of the square mean you can use it for large-scale layout work, as well.

A saddle square simplifies the process of transferring layout marks around a corner quickly and accurately.

DOUBLE SQUARE

While a large tool like a framing square is great, I often need to deal with tasks at the other end of the size extreme. One of my most used squares when this is the case is a 4" double square. Its size makes it a handy tool to keep in my apron pocket on a regular basis.

Like a combination square, the blade slides along the main body. For me, that's its biggest advantage. I can set the blade to a specific position and use the square to accurately create layout marks precisely along an edge, as detailed in the upper right photo.

An added advantage comes when you set the blade flush with the edge of the body. This makes the square a precision setup tool for use where a combination square would be too large.

SADDLE SQUARE

The last must-have square in my toolkit is a saddle square. Like a saddle on a horse, a saddle square wraps around two faces of a workpiece to make transferring layout marks around the corner of a workpiece easier and more accurate, as you see at left.

Saddle squares are available in a couple of different sizes. For the furniture work I do, I prefer the smaller size.

Challenging layout tasks don't have to be a problem. Adding a few inexpensive squares may be all you need. W

How-To: THE SQUARE TEST

For a square to be useful, it needs to be accurate. Fortunately, there's an easy way to check this. All you need is a scrap workpiece with a jointed edge, a strip of painters' tape, and a utility knife.

You'll start by placing the strip of painters' tape across the workpiece. Then, use the knife to make a pair of cuts along the blade of the square, as detailed in the pair of photos at right.

If the square is accurate, that strip will be a consistent width from one end to the other. If not, the square isn't accurate for use in checking parts or projects and should be repaired or replaced.

With the square firmly against the jointed edge, cut through the tape using the blade as a guide.

After flipping the square, make a second cut and peel away the waste. If the strip is a consistent width, the square is accurate.

Maintaining a Table Saw Top

At the heart of many shops is the table saw. There's a good reason for this. When it comes to multi-tasking, no other tool has the street cred that the table saw does. From ripping full sheets of plywood to creating a fine set of box joints, there are few that rival this tool.

◄ Here are some allies when it comes to maintaining the top of your table saw.

My table saw's duties don't end there. It's also my second workbench. I often call upon it to act as an assembly station or a secondary worksurface.

While the saw is up to these tasks, they do take a toll that often shows up on the top of the saw. Glue, stain, rust accumulation and random dings all combine to impede the saw from performing its core duty — cutting wood safely, accurately, and smoothly.

Not to worry though, a little maintenance will quickly bring the surface back in shape. The steps shown here are ones that I go through once a year or so to make sure my table saw is in tip-top shape. If you're reconditioning a badly neglected saw, or one with heavy rust on the surface, you need to resort to more drastic measures. These could be chemical rust dissolvers or a product like the one shown in the How-To box on the next page.

▲ Scrapers make quick work of glue drips on your table saw. A scraper with a replaceable carbide blade works best.

And once the surface is back in shape, there are some simple steps you can take to protect it and make it a working top

Written by: Erich Lage

that interacts smoothly with the material you're cutting. But first, it's time to roll up your sleeves and tackle the surface.

STUCK-ON STUFF. The best place to start is with the low-hanging fruit, which in this case involves knocking off any glue, stain, or finish build up. A carbide scraper is what I rely on for this task (right photo, previous page). A scraper with a steel blade would work also, but I prefer the clean, aggressive bite that a carbide scraper provides.

You'll soon find that it's not just the surface of the table saw that needs attention. The edges of the table, miter gauge slot, and quite possibly the opening for the insert might have suffered some dings along the way. To smooth these out, all it takes is a couple of passes with a file. When that's done, it's a good time to sweep the surface of the saw with your shop vacuum. Now you can address any surface rust.

RUST REMOVAL. Here I'm dealing with several spots — a ring from a drink can that one of the kids left on the saw and some hazy rust from the humid summer. To remove these blemishes, I use an abrasive block that's impregnated with silicon carbide (main photo, previous page). It looks like a regular sanding block, but it's not. It's a rubber block that wears away like an eraser as you use it. This exposes more of the silicon carbide. The block is full of this material all the way to the core which pretty much guarantees you'll be able to use it many times.

SANDING & BUFFING SMOOTH. This next step is similar to the honing phase of sharpening your tools. A sanding block is called into action along with some 400-grit wet-or-dry sandpaper. These, along with some lubrication (such as *WD-40*) lets you sand the surface creating a slurry that's easily cleaned up with a rag (photo above). Follow this up with your finish sander and an abrasive pad to buff the top (far left photo).

INVEST IN PROTECTION. Now that you've spent the time cleaning the top of your table saw, there's one more step to take — a protective top coat. This can be done in two ways — traditional paste wax (left photo) or a spray-on dry lubricant (bottom left photo, previous page). I have called both into duty, using the dry lubricant between paste wax applications. The more friction you can remove from woodworking, the better your project will proceed. W

▲ A sanding block (a cork one shown here), some wet-or-dry sandpaper, and some *WD-40* works great as a final cleaning on your saw top.

▲ A final buff with a finish sander and an abrasive pad (cut to fit) prepares the top for the final step.

▲ A coat of wax or dry lubricant spray will not only protect the surface, but it also adds to the smooth operation of the tool.

How-To: REMOVE LOTS OF RUST & DEBRIS

On occasion, you have the task of bringing a table saw back to life that's been out of service for a long time. Often, such a saw has a surface so rusted that using the standard supplies shown in this article will take too long.

The disc you see here is the remedy to that problem. It's a disc that fits an angle grinder. The face is an open nylon weave coated with silicon carbide. It's designed to remove paint, glue, and rust without build up in the disc or eating into the base material. Sources on page 66 provides the rundown on where you can purchase this disc.

▲ When dealing with heavily rusted surfaces, this highly abrasive pad will remove all the debris without harming the surface.

Illustrations: Bob Zimmerman

tips from our shop

Shop Notes

Roller Jig

Turning the rollers for the edge sander (page 34) presented a bit of a challenge. Since the blanks are drilled before glueup, getting the blanks centered on the lathe to turn them round would have been difficult. Instead, I used the simple router table jig you see here. It serves two functions: It turns the blanks round, plus slightly tapers each end to create a crown. This crown helps to ensure the belt tracks true.

SIMPLE CONSTRUCTION. The drawings below show you how to construct the jig out of plywood. The idler roller blank is fitted with the bearings and shaft (no bearings in the drive roller). The shaft feeds through the ends of the jig. This assembly is held in place with a stop collar at each end. There shouldn't be any side-to-side play and the roller blank should spin freely.

TURNING IT ROUND. The first step in shaping the roller is to trim off the waste to create a smooth, round cylinder. I used a core box bit in the router table to accomplish this. The main photo shows the basic technique. Slowly rotate the blank as you feed the jig into the bit.

CREATING A CROWN. Once the bulk of the waste is removed, create a slight taper on each end. This is easy to do by placing shims under one end of the jig, as shown below. You'll need to raise the bit to remove 1/16" of material at the end of the roller blank. As you move the jig into the bit, it will remove less material until it quits cutting about midway through the blank. Then move the shims to the other end of the jig and rotate the jig 180° to repeat the process.

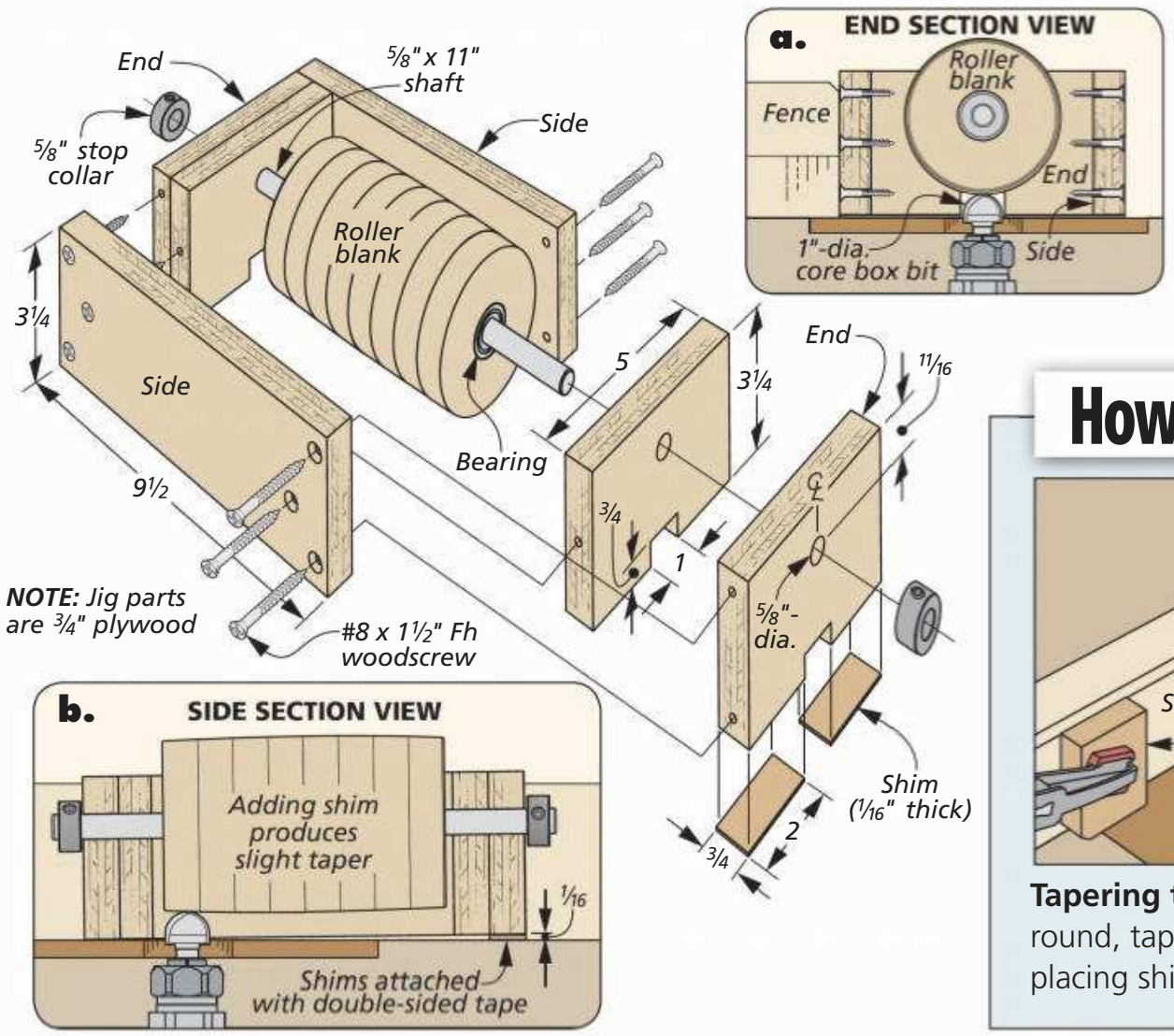

How-To: USE THE ROLLER JIG

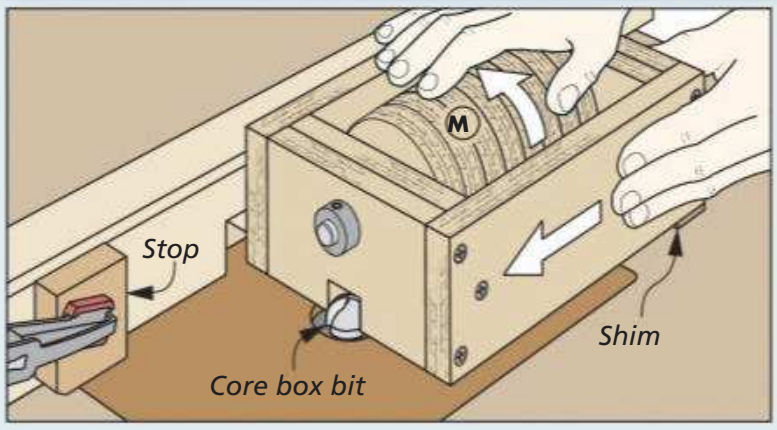

Tapering the Roller. After turning the roller blank round, taper each end slightly by raising the bit and placing shims under the back edge of the jig.

Cheese Slicer Grain Layout

The cheese slicer on page 16 requires making a frame that will hold a tensioned cutting wire. To maintain strength in the finished frame, the grain orientation of the two slicer halves must be traveling in opposite directions. To accomplish this, I followed the steps shown here. First, I cut a blank diagonally into two triangles. Then, the two halves of the slicer frame can be laid out along the hypotenuse of the triangles. The result will be two slicer frame halves with opposing grain.

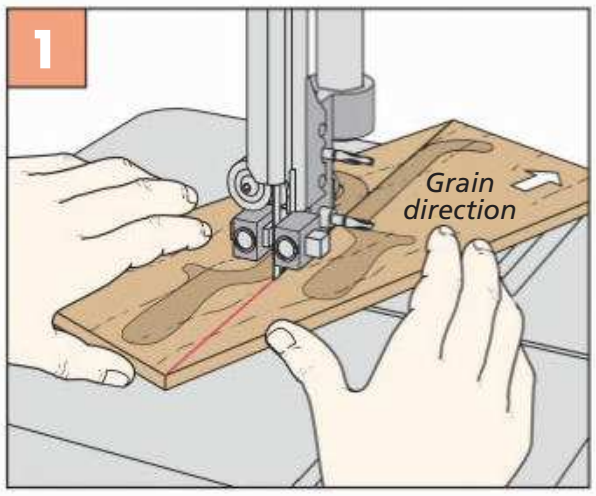

Lay Out & Cut Out. At the band saw, cut a hardwood blank diagonally to create two triangular shaped blanks.

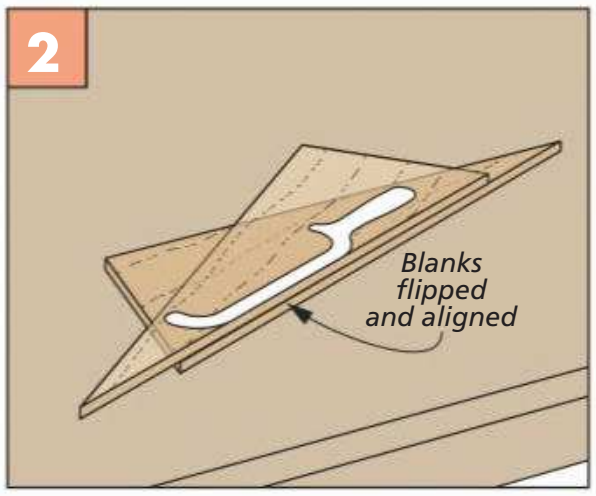

Glue Up. With the blanks cut, the slicer frame can be laid out following the hypotenuse of each triangle blank.

Rounding Tenons

The stretchers of the campaign chair on page 26 are connected to the side assemblies with rounded tenons. Generally, creating a rounded tenon is a straightforward process using a rasp and a chisel. Because these tenons are through tenons, I wanted to ensure that the ends of the tenons were as crisp and clean as possible. To create these clean tenons, I started off at the router table.

ROUT THE TENON. After the tenons are cut to size, I set up the router table to round one edge of the tenon, as seen in Figure 1. It's important to set a stop block on the fence to keep from cutting into the tenon shoulder. This will leave a small portion of the tenon still square, but you'll take care of that later. After routing two of the four corners of the tenon, you can reposition the fence, and raise the bit to rout the remaining two edges, as seen in Figure 2.

FINISH THEM OFF. After the routing is done on all four tenons, you can head back to the bench to finish up the rounding. The small portion of square tenon that's left nearest to the tenon shoulder is easily taken care of with a file (Figure 3). Just be careful to leave the tenon shoulder untouched.

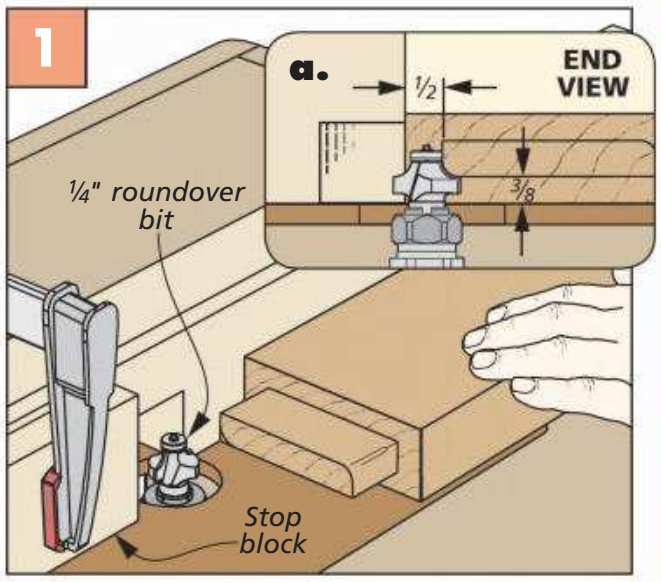

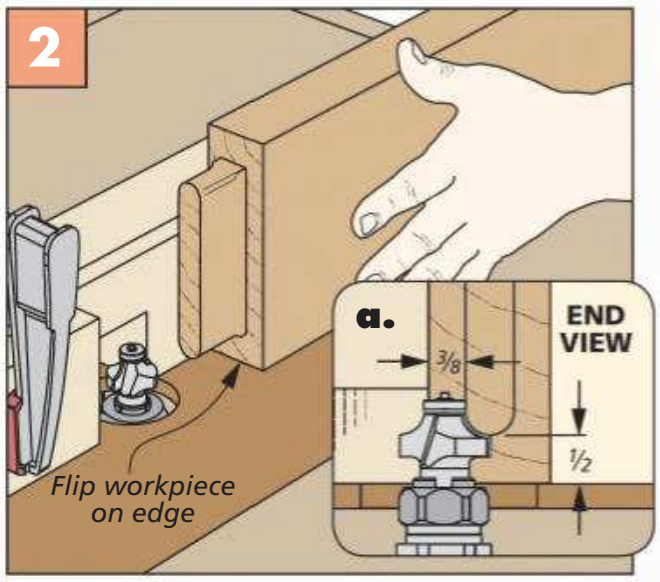

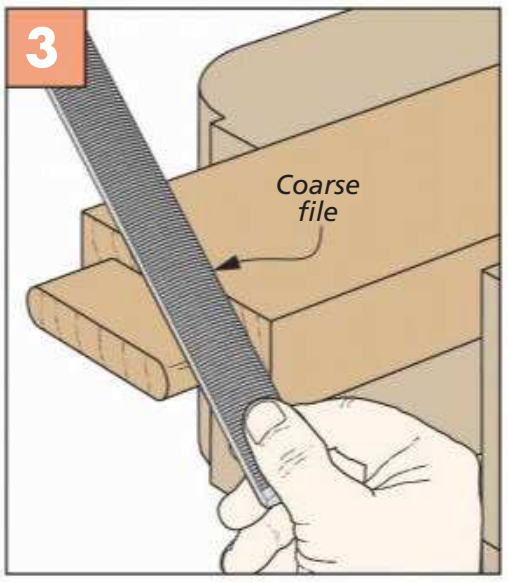

Chamfering Dowels

To hold the seat of the campaign chair into the frame, I used a series of dowels passed through the seat loops. The ends of the dowels are chamfered so they slip through the loops smoothly without catching. Chamfering the dowels is easy to do at the router table. Use a block with a hole drilled in it, sized to match the dowel. Then, set the router bit height to cut a 1/16" chamfer. Insert the dowel into the spinning bit and rotate to chamfer the ends. W

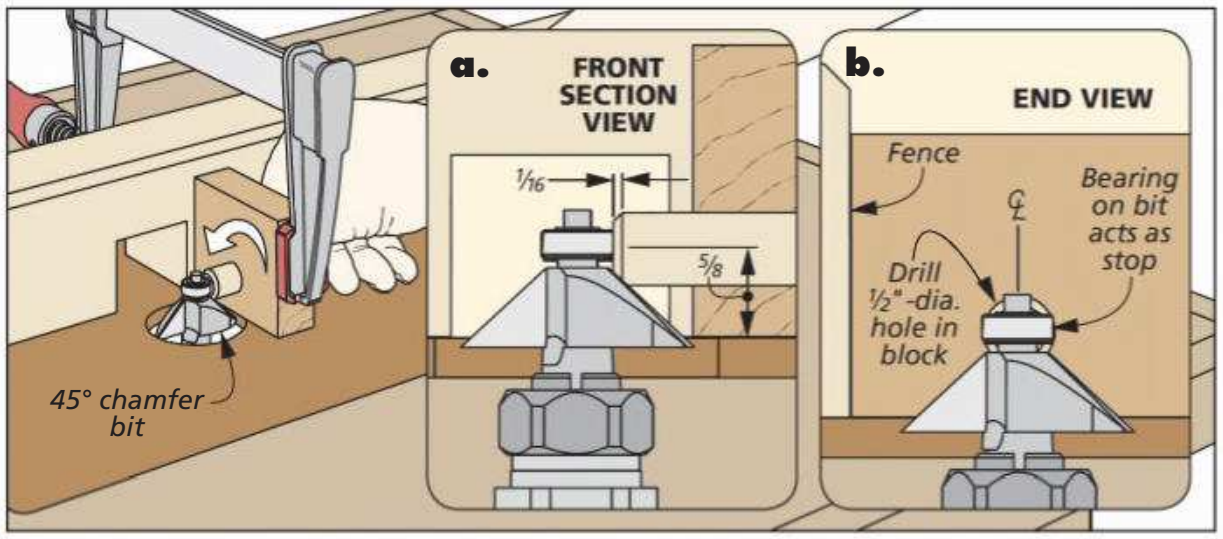

hardware & supplies
Sources

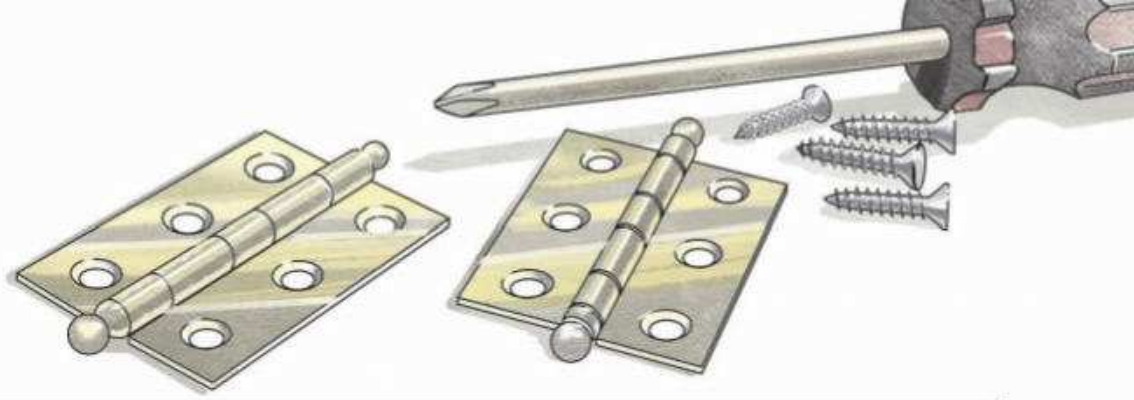

MAIL ORDER SOURCES

Project supplies may be ordered from the following companies:

Amana Tool
800-445-0077
amanatool.com

amazon.com

Cheese Slicing, LLC
920-627-6969
cheeseslicing.com

Electric Motor Wholesale
302-653-1844
electricmotorwholesale.com

General Finishes
800-783-6050
generalfinishes.com

Grizzly Industrial
800-523-4777
grizzly.com

The Hardware Hut
800-708-6649
thehardwarehut.com

The Home Depot
800-466-3337
homedepot.com

Infinity Cutting Tools
877-872-2487
infinitytools.com

Lee Valley
800-871-8158
leevalley.com

Lehigh Valley Abrasives
616-228-0650
lehighvalleyabrasives.com

McMaster-Carr
630-833-0300
mcmaster.com

Rockler
800-279-4441
rockler.com

The Rust Store
877-256-9301
theruststore.com

Tandy Leather
877-532-8437
tandyleather.com

Most of the materials and supplies you'll need to build the projects are available at hardware stores or home centers. For specific products or hard-to-find items, take a look at the sources listed here. You'll find each part number listed by the company name. See the left margin for contact information.

BOX JOINT JIG *(p.12)*

- **Rockler**
  Box Joint Jig 59032
  XL Box Joint Jig 50322

CHEESE SLICER *(p.16)*

- **Cheese Slicing, LLC**
  5" Slicer Wire CW-GRY5

Both the cheese slicer and cutting board were finished with a coat of mineral oil.

CAMPAIGN CHAIR *(p.26)*

- **Tandy Leather**
  Adjustable V-Gouge . . 31811-00
  Overstitch wheel 8079-05
  4-in 1 Awl 3209-00
  Waxed Nylon Thread . . 1227-01
  Leather or Hide . . . . . varies
- **Amazon**
  Compass Cutter . . .B004INPJPQ

The chair is stained with a 50/50 mixture of *Minwax* "Provincial" and *General Finishes* "Candlelite", then topped with multiple coats of spray lacquer.

EDGE SANDER *(p.34)*

- **McMaster-Carr**
  Compression Springs 9657K469
  3/8" -16 Knrld. Knob . . 6121K711
  3/8" -24 Knrld. Knob . . . 6121K56
  High-Load Bearings . . . 2780T62
  5/8" Shaft Coupler . . . 61005K344
  Hand Wheel 6033K71
  1/2" -13 Studd. Knobs 60965K362
- **Infinity Cutting Tools**
  Miter Track 100-655
- **Electric Motor Wholesale**
  1-hp Motor 110088
- **Grizzly**
  On/Off Switch D4157
  6" x 89" Sanding Belt . . . H6883

The edge sander was painted with *Benjamin Moore's Regal Matte* in "Nocturnal Gray" (2135-30).

EASTLAKE TABLE *(p.46)*

- **Amana Tool**
  Ogee Fillet Bit 54114
- **Rockler**
  TransTint Dye 27419
- **Home Depot**
  DAP Alex Acry. Ltx. Clk . 18072

The table is stained with water-based "Dark Mission Brown", from *TransTint* dye. Then two coats of lacquer finish were applied. The marble top was purchased from a local countertop manufacturer.

ESSENTIAL SQUARES *(p.60)*

- **Lee Valley**
  Veritas Saddle Square . 05N56.01
  4" Double Square 24N08.01

TABLE SAW CARE *(p.62)*

- **Rockler**
  GlideCote. 97594
- **Lee Valley**
  2" Carbide Scraper . . .97K51.01
- **Lehigh Valley Abrasives**
  4 1/2"x 5/8" Strp Disc CS4.5-CRST
- **The Rust Store**
  Sandflex Blocks SF3PACK
- **The Hardware Hut**
  Sprayway Dry Lub. .SPR-SW295

All the other products can be purchased at your local hardware store or home center.

The Complete *Woodsmith* Magazine Collection—*1979 to 2018*

✓ **Access Every Issue, Article, Photo, and Illustration Ever Published!**

✓ **Every Plan, Tip, and Technique, Everything You'll Ever Need!**

✓ **Instant Online Access on Your Computer, Laptop, Tablet, or Smartphone!**

Item #WL07U

Woodsmith, The Complete Magazine Collection on USB Flash Drive...$99

Changing the way you work with your router...

With unique router bits, tables, and the PowerLift.

Free Shipping
800-533-9298.

MLCS
mlcswoodworking.com

BREATHE CLEANER, SAFER AIR
WITH CONFIDENCE

THE NEW AFS 1250 WITH MICRO-DUST COLLECTION TECHNOLOGY

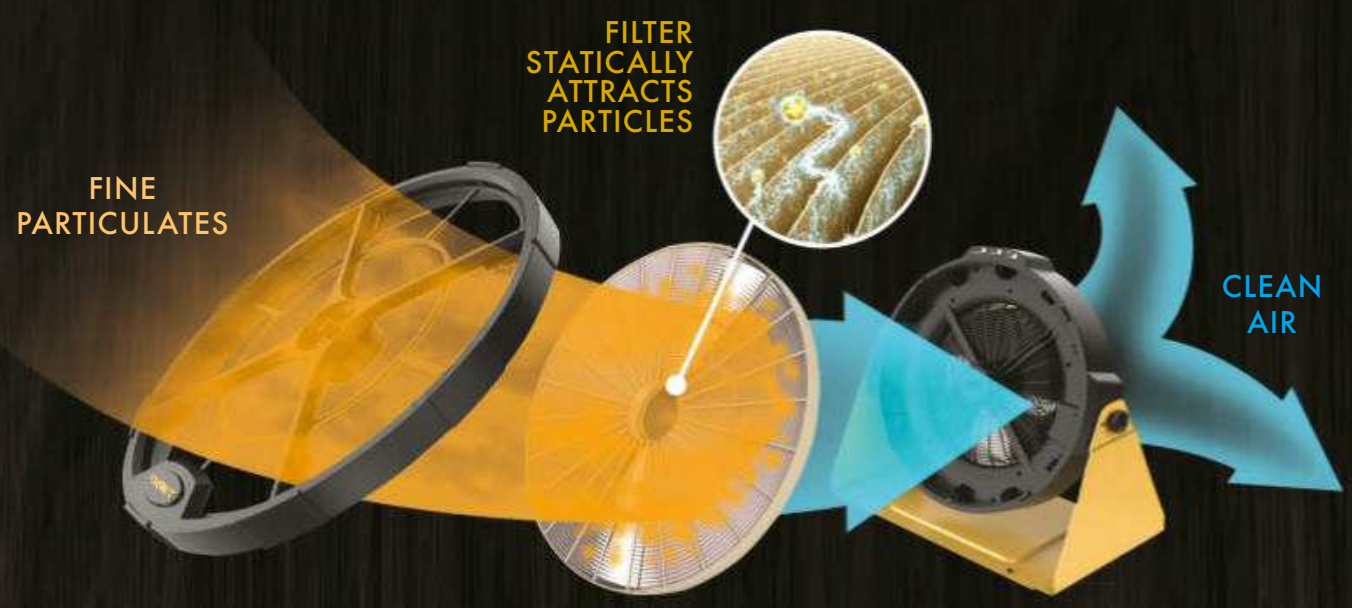

VISIT POWERMATIC.COM/MICRO-DUST
FOR MORE INFORMATION AND A DEALER NEAR YOU

POWERMATIC

Woodsmith

Back Issue Library **Online**

An Incredible **VALUE!**

- Access every issue of Woodsmith ever published — over 228 complete issues!
- Get over 4,000+ projects, tips and technigues.
- Enjoy instant online access on your computer, laptop — even tablet.

Order for **$79**

Get the USB Flash Drive for $20 MORE!

LEARN MORE at www.woodsmithlibrary.com

Sign Up for Free Weekly eTips

Desktop

- Get a video tip sent to you every week
- Includes a printable, step-by-step tip
- Ready when you are — on any device

Laptop

Tablet

Smartphone

Sign up today at **Woodsmith.com**